# ZT400 Series

Industrial Printer

zebracod.ir

## User Guide

ZEBRA

zebracod.ir

P1066582-07EN Rev A

2023/03/16

ZEBRA and the stylized Zebra head are trademarks of Zebra Technologies Corporation, registered in many jurisdictions worldwide. All other trademarks are the property of their respective owners. ©2023 Zebra Technologies Corporation and/or its affiliates. All rights reserved.

Information in this document is subject to change without notice. The software described in this document is furnished under a license agreement or nondisclosure agreement. The software may be used or copied only in accordance with the terms of those agreements.

For further information regarding legal and proprietary statements, please go to:

SOFTWARE: zebra.com/linkoslegal.
COPYRIGHTS: zebra.com/copyright.
PATENTS: ip.zebra.com.
WARRANTY: zebra.com/warranty.
END USER LICENSE AGREEMENT: zebra.com/eula.

# Terms of Use

## Proprietary Statement

This manual contains proprietary information of Zebra Technologies Corporation and its subsidiaries (“Zebra Technologies”). It is intended solely for the information and use of parties operating and maintaining the equipment described herein. Such proprietary information may not be used, reproduced, or disclosed to any other parties for any other purpose without the express, written permission of Zebra Technologies.

## Product Improvements

Continuous improvement of products is a policy of Zebra Technologies. All specifications and designs are subject to change without notice.

## Liability Disclaimer

Zebra Technologies takes steps to ensure that its published Engineering specifications and manuals are correct; however, errors do occur. Zebra Technologies reserves the right to correct any such errors and disclaims liability resulting therefrom.

## Limitation of Liability

In no event shall Zebra Technologies or anyone else involved in the creation, production, or delivery of the accompanying product (including hardware and software) be liable for any damages whatsoever (including, without limitation, consequential damages including loss of business profits, business interruption, or loss of business information) arising out of the use of, the results of use of, or inability to use such product, even if Zebra Technologies has been advised of the possibility of such damages. Some jurisdictions do not allow the exclusion or limitation of incidental or consequential damages, so the above limitation or exclusion may not apply to you.

zebracod.ir

# Contents

**Introduction** ..... **7**
Printer Options ..... 7
Communication Interfaces ..... 8
Printer Components ..... 8
Control Panel ..... 10
Navigate the Display Screens Using the Keypad ..... 11

**Printer Setup** ..... **15**
Select a Location for the Printer ..... 15
Ordering Supplies and Accessories ..... 15
Media ..... 16
Ribbon ..... 16
Inspecting the Contents of the Box ..... 17
Connecting the Printer to a Device ..... 18
Connect to a Phone or Tablet ..... 18
Installing Drivers and Connecting to a Windows-Based Computer ..... 18
Connecting to a Computer Using the Printer's USB Port ..... 25
Connecting to Your Network through the Printer's Ethernet Port ..... 27
Connecting the Printer to Your Wireless Network ..... 29
Connecting the Printer to a Serial or Parallel Port on Your Computer ..... 30
What to Do If You Forget to Install Printer Drivers First ..... 31
Selecting a Print Mode ..... 34
Loading the Media ..... 35
Inserting the Media into the Printer ..... 36
Using Tear-Off Mode ..... 39



zebracod.ir

Using Peel-Off Mode (with or without Liner Take-Up)....42
Using Rewind Mode....52
Using Cutter Mode or Delayed Cut Mode....59
Loading the Ribbon....64
Installing Label Design Software....68
ZebraDesigner System Requirements....68
Printing a Test Label and Making Adjustments....69

**Printer Configuration and Adjustment....71**
Changing Printer Settings....71
Changing Printer Settings through the Windows Driver....71
Changing Printer Settings through the User Menus....73
Calibrating the Ribbon and Media Sensors....122
Performing Auto Calibration....123
Performing Manual Sensor Calibration....123
Adjusting the Printhead Pressure....129

**Routine Maintenance....134**
Cleaning Schedule and Procedures....134
Clean the Exterior, the Media Compartment, and the Sensors....135
Cleaning the Printhead and Platen Roller....136
Cleaning the Peel Assembly....139
Cleaning and Lubricating the Cutter Module....143
Removing Used Ribbon....148
Replacing Printer Components....149
Ordering Replacement Parts....150
Recycling Printer Components....150
Storing the Printer....150
Lubrication....150

**Diagnostics and Troubleshooting....151**
Printer Diagnostics....151
Evaluating Barcode Quality....151



zebracod.ir

Power-On Self Test....154
PAUSE Self Test....154
CANCEL Self-Test....155
FEED and PAUSE Self Test....156
CANCEL and PAUSE Self Test....157
Sensor Profile....157
Performing a Communication Diagnostic Test....159
Loading Defaults or Last-Saved Values....160
Alerts and Error States....160
Indicator Lights....160
Error Messages....163
Troubleshooting....167
Servicing the Printer....178
Shipping the Printer....179

**Using a USB Host Port and the Print Touch Feature....180**
Items Required for the Exercises....180
Files for Completing the Exercises....181
USB Host....183
Exercise 1: Copy Files to a USB Flash Drive and Perform USB Mirror....183
Exercise 2: Print a Label Format from a USB Flash Drive....184
Exercise 3: Copy Files to/from a USB Flash Drive....185
Exercise 4: Enter Data for a Stored File with a USB Keyboard and Print a Label....186
Print Touch / Near-Field Communication (NFC)....187
Exercise 5: Enter Data for a Stored File with a Device and Print a Label....187

**Specifications....189**
General Specifications....189
Power Cord Specifications....189
Communication Interface Specifications....191
Standard Connections....191
Optional Connections....193
Wireless Specifications....193



zebracod.ir

Printing Specifications....194
Media Specifications....195
Ribbon Specifications....196
Compliance Information....196

**Glossary.... 198**

zebracod.ir



zebracod.ir

# Introduction

Use the information in this section to familiarize yourself with your printer.

## Printer Options

Your printer may be upgraded with one of three options depending on your printing needs. For information about the print modes that can be used with the printer options, see Selecting a Print Mode on page 34.

Tear-Off (Standard)

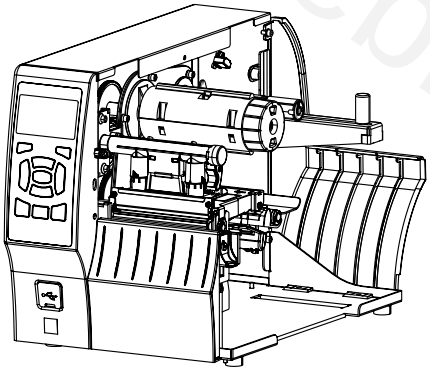

Peel with Liner Take-Up option

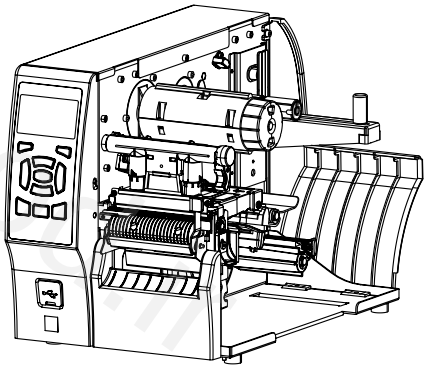

Rewind option

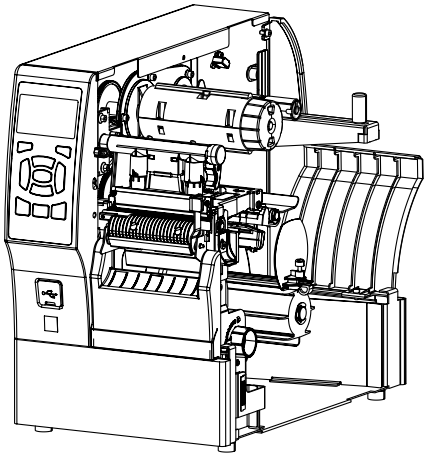

Cutter option

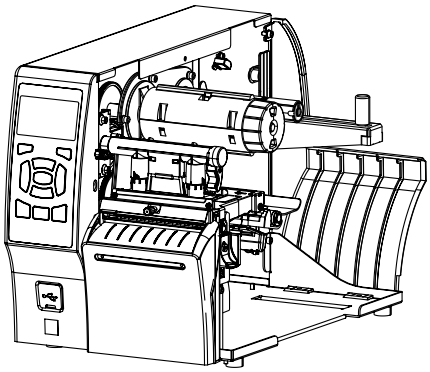



zebracod.ir

## Communication Interfaces

Your printer supports a variety of communication interfaces.

The communication interface connectors are shown in Figure 2. A ZebraNet wireless print server option may also be present on your printer. You may send label formats to the printer through any communication interface that is available on your printer.

- For detailed information about the types of connections available, see Communication Interface Specifications on page 191.
- For instructions on when and how to connect your computer to one or more of these communication interfaces, see Installing Drivers and Connecting to a Windows-Based Computer on page 18.

**Figure 1** Location of Communication Interfaces

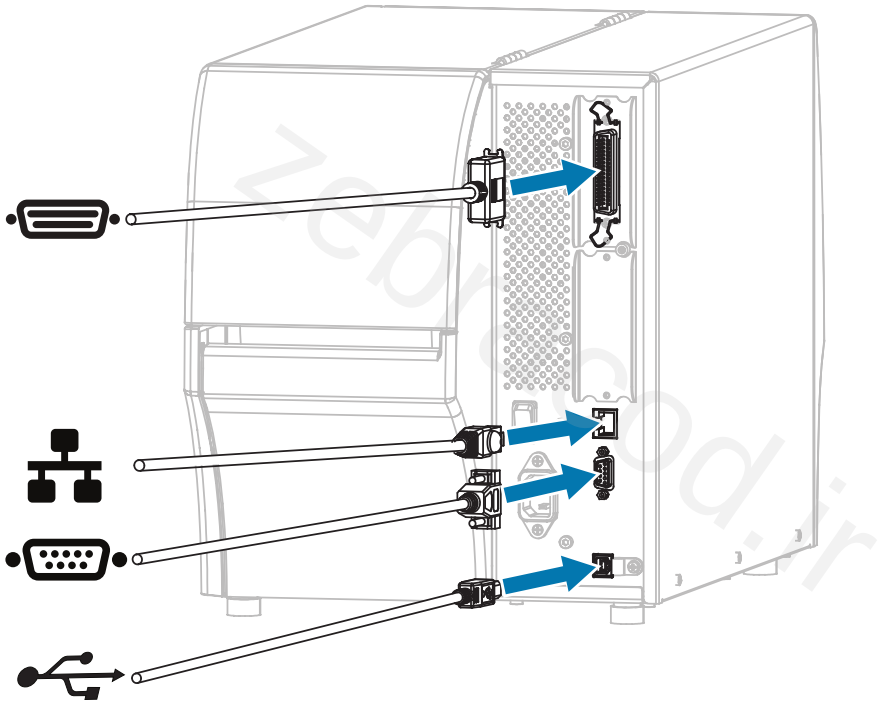

| | |
|---|---|
| | Parallel port |
| | Internal wired Ethernet print server |
| | Serial port |
| | USB port |

## Printer Components

The components inside your printer are color-coded. The touch points you will need to handle are colored gold inside the printers and are highlighted in gold in the illustrations in this guide.

The components inside the media compartment of a standard printer are shown here.



zebracod.ir

**NOTE:** Depending on the printer model and the installed options, your printer may look slightly different. The components that are labeled are mentioned in procedures throughout this guide.

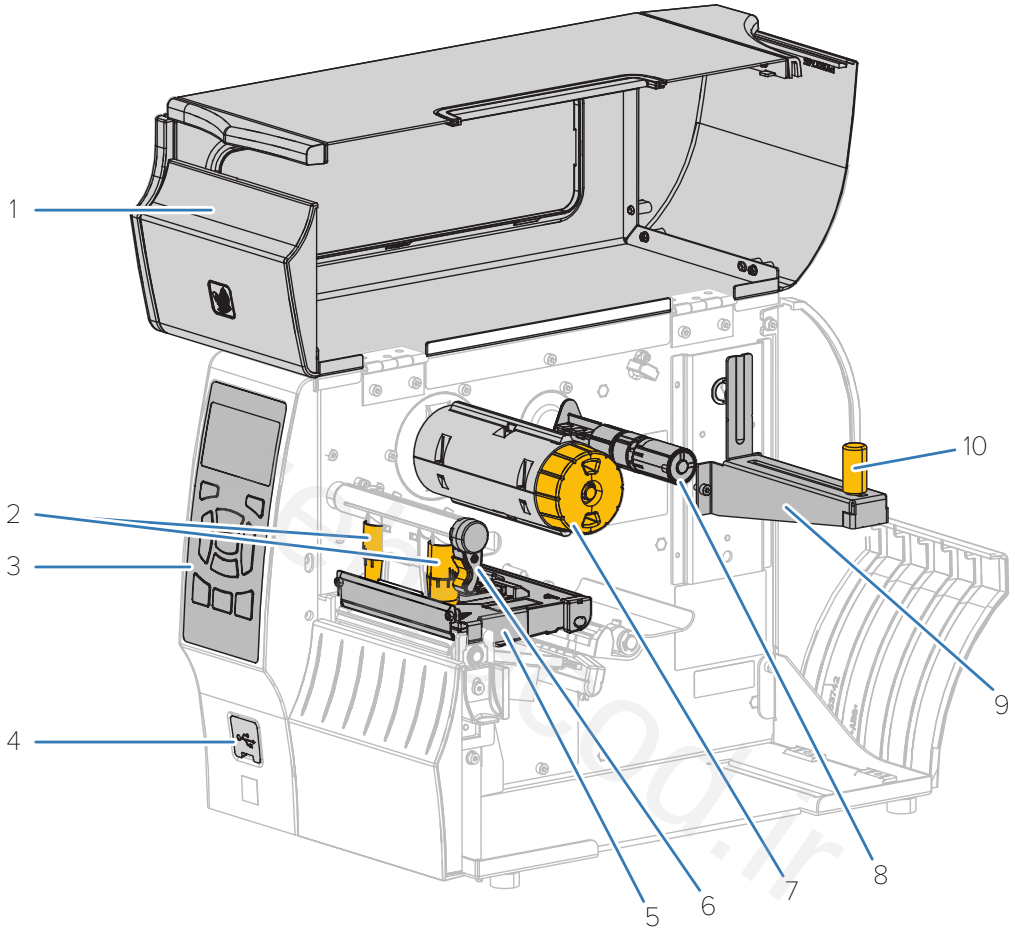


| | |
|---|---|
| 1 | Media door |
| 2 | Printhead pressure adjustment toggles |
| 3 | Control panel |
| 4 | USB host port (may be single or dual) |
| 5 | Printhead assembly |
| 6 | Printhead-open lever |
| 7 | Ribbon take-up spindle (only on printers with the Thermal Transfer option installed) |
| 8 | Ribbon supply spindle (only on printers with the Thermal Transfer option installed) |
| 9 | Media supply hanger |
| 10 | Media supply guide |



zebracod.ir

# Control Panel

The control panel indicates the printer's current status and allows the user to control basic printer operation.

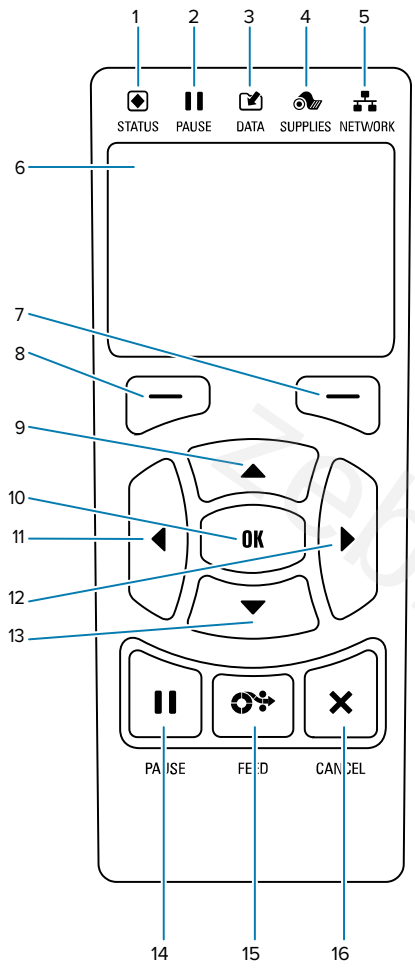


| | |
|---|---|
| 1 | (STATUS indicator) |
| 2 | (PAUSE indicator) |
| 3 | (DATA indicator) |
| 4 | (SUPPLIES indicator) |
| 5 | (NETWORK indicator) |
| The above indicators provide information on your printer's status. For the various states of these lights and what they convey, see Indicator Lights on page 160. | |
| 6 | Display—Shows the printer's current status and allows the user to navigate the menu system. An optional color display is available for purchase. Contact your authorized Zebra reseller for more information. |
| 7 & 8 | **RIGHT-SELECT** and **LEFT-SELECT** buttons—Execute the commands shown directly above them on the display. |
| 9 | **UP ARROW**—Used to change parameter values (such as increase a value) or to scroll through choices. |
| 10 | **OK**—Selects or confirms what is shown on the display. |
| 11 | **LEFT ARROW**—Navigates to the left. Active ONLY when navigating the menu. |
| 12 | **RIGHT ARROW**—Navigates to the right. Active ONLY when navigating the menu. |
| 13 | **DOWN ARROW**—Changes the parameter values (such as decrease a value) or to scroll through choices. |
| 14 | **PAUSE**—Starts or stops printer operation when pressed. |
| 15 | **FEED**—Prompts the printer to feed one blank label each time the button is pressed. |
| 16 | **CANCEL**—Cancels label formats when the printer is paused.<br>To cancel the next label format that is about to print, press ✕ one time.<br>To cancel all label formats sent to the printer, press and hold ✕ for two seconds. |



zebracod.ir

## Navigate the Display Screens Using the Keypad

Use the control panel on your printer to navigate the screens, select items shown on the display, and modify them.

At the Idle Display...

```
IDLE DISPLAY
▼      FW VERSION      ▲
```

press **LEFT SELECT** to access the printer's Home menu.

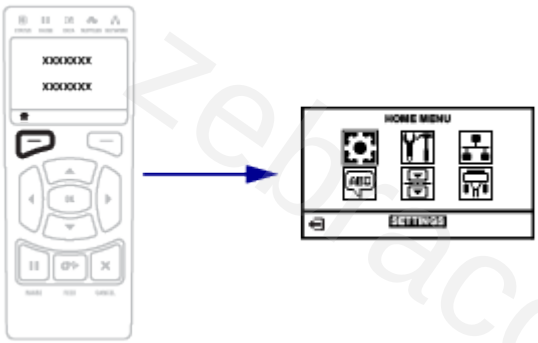


zebracod.ir



zebracod.ir

**Table 1** Home Menu

| | | |
|---|---|---|
| <br>At the Home menu, to move from icon to icon, use the **ARROW** buttons.<br>When an icon is selected, its colors are reversed to highlight it.<br>SETTINGS menu icon<br> <br>SETTINGS menu icon highlighted<br> | <br>To select the highlighted menu icon and enter the menu, press **OK**. | <br>Press **LEFT SELECT** to exit the Home menu and return to the Idle Display.<br>The printer automatically returns to the Idle Display after 15 seconds of inactivity on the Home menu. |

**Table 2** User Menus

| | |
|---|---|
| <br>At any User Menu screen, press **LEFT SELECT** to return to the Home menu. The printer automatically returns to the Home menu after 15 seconds of inactivity in a user menu. | <br>▼ and ▲ indicate that a value can be changed. Any changes that you make are saved immediately. Press the **UP ARROW** or **DOWN ARROW** to scroll through accepted values. |



zebracod.ir

**Table 2** User Menus (Continued)

| | |
|---|---|
| <br>To scroll through the items in a user menu, press the **LEFT ARROW** or **RIGHT ARROW**. | <br><br>A word in the bottom-right corner of the display indicates an available action.<br>Press **OK** or press **RIGHT SELECT** to perform the action shown. |

**Table 3** Menu Shortcuts

| | |
|---|---|
| 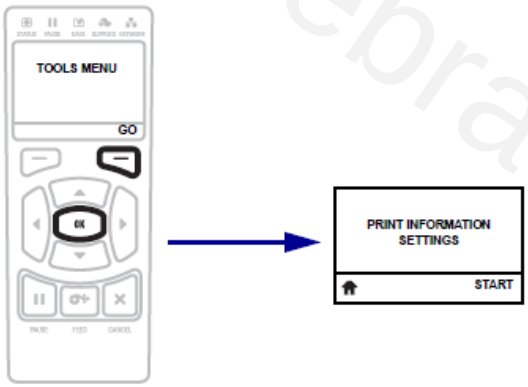 <br><br>To go to the next user menu from a menu shortcut, press **OK**, or press **RIGHT SELECT**, to select GO. | 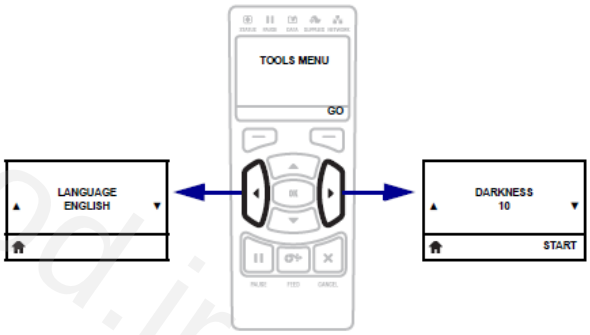 <br><br>To continue to navigate within the same user menu, press the **LEFT ARROW** or **RIGHT ARROW**. |

## Idle Display, Home Menu, and User Menus

Use the printer's control panel display to view the printer's status and review or change its operating parameters.

After the printer completes the power-up sequence, it moves to the Idle Display. If a print server is installed, the printer cycles through its IP address and information configured by the user.



zebracod.ir

**Figure 2** Idle Display

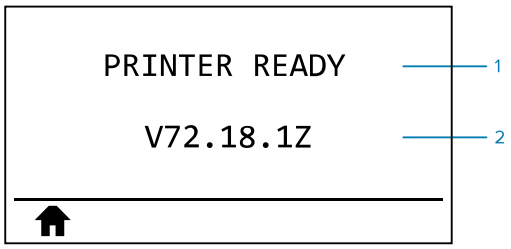


| | |
|---|---|
| 1 | The printer's current status |
| 2 | Information you set through the Idle Display. See Idle Display in Calibration, Diagnostic, and Other Tools on page 82 for details. |
| | Home menu shortcut |

Use the Home menu (see Figure 3 Home Menu—Standard and Optional Color on page 14) to access the printer's operating parameters through the eight user menus shown in Changing Printer Settings through the User Menus on page 73.

**Figure 3** Home Menu—Standard and Optional Color

For descriptions of the user menus and menu items that appear in each, see the respective sections under Changing Printer Settings through the User Menus on page 73.



zebracod.ir

# Printer Setup

This section assists a user with initial setup and operation of the printer.

## Select a Location for the Printer

Select a location for the printer that meets these conditions:

- Surface—The surface where the printer will be located must be solid, level, and of sufficient size and strength to hold the printer.
- Space—The area where the printer will be located must include enough space for ventilation and for accessing the printer components and connectors. To allow for proper ventilation and cooling, leave open space on all sides of the printer.

**CAUTION:** Do not place any padding or cushioning material behind or under the printer because this restricts air flow and could cause the printer to overheat.

- Power—The printer should be within a short distance of an appropriate power outlet that is easily accessible.
- Data communication interfaces—The printer must be within range of your WLAN radio (if applicable) or within an acceptable range for other connectors to reach your data source (usually a computer). For more information on maximum cable lengths and configuration, see Communication Interface Specifications on page 191.
- Operating conditions—Your printer is designed to function in a wide range of environmental and electrical conditions, including a warehouse or factory floor. The following table shows the temperature and relative humidity requirements for the printer when it is operating.

**Table 4** Operating Temperature and Humidity

| Mode | Temperature | Relative Humidity |
|---|---|---|
| Thermal Transfer | 40° to 104°F (5° to 40°C) | 20 to 85% non-condensing |
| Direct Thermal | 32° to 104°F (0° to 40°C) | |

## Ordering Supplies and Accessories

The following things that you will need do NOT come with the printer:

- Communication/network cables (such as serial or wired Ethernet) other than USB



zebracod.ir

- Media
- Ribbon (if your printer has a thermal transfer option)

For recommended supplies to ensure optimal operation of your printer, go to zebra.com/supplies.

## Media

For optimal printing quality and proper printer performance across our product line, Zebra strongly recommends the use of Zebra Certified Supplies as part of the total solution.

A wide range of paper, polypropylene, polyester, and vinyl stock has been specifically engineered to enhance the printing capabilities of the printer and to prevent premature printhead wear. To purchase supplies, go to zebra.com/supplies.

See Selecting a Print Mode on page 34. Also refer to the media specifications for the printer for minimum label lengths and other important things to consider.

The Glossary on page 198 includes terms associated with media, such as black mark media, gap/notch media, RFID media, fanfold media, and roll media. Use these terms to help determine which type of media will suit your needs.

## Ribbon

**NOTE:** This section applies only to printers that have the Thermal Transfer option installed.

| | |
|---|---|
| Do I need to use ribbon? | The media itself determines if you will need to use ribbon.<br>• Thermal Transfer media—Requires ribbon.<br>• Direct Thermal media—Does NOT require ribbon. |
| How can I tell if media is Direct Thermal or Thermal Transfer?<br>(See direct thermal on page 200 and thermal transfer on page 206 for definitions.) | The easiest way to find out is to scratch the surface of the media rapidly with your fingernail. If a black mark appears where you scratched, the media is Direct Thermal, so you do NOT need ribbon. |
| What kind of ribbon can I use? | This printer can only use ribbon that is coated on the outside unless you purchase and install the optional spindle that allows ribbon that is coated on the inside. Contact your authorized Zebra reseller for ordering information. |



zebracod.ir

| | |
|---|---|
| How can I tell which side of the ribbon is coated? | Use one of these two methods to identify the coated side:<br>• Method 1: Adhesive Test<br>**1.** Press a corner of the sticky side of a label to the outer surface of the ribbon roll.<br>**2.** Peel the label off the ribbon.<br>If ink particles adhere to the label, the outer side of the roll is coated. Repeat this test with the inner surface if needed to confirm which side is coated.<br>• Method 2: Ribbon Scratch Test<br>**1.** Unroll a short length of ribbon and place the outer surface against a piece of paper.<br>**2.** Scratch the inner surface of the ribbon with your fingernail.<br>**3.** Lift the ribbon and check for marks on the paper.<br>If the ribbon left a mark, the outer side is coated. |

## Inspecting the Contents of the Box

Ensure that the printer box contains all the items you need to set it up.

**IMPORTANT:** Zebra Technologies is not responsible for any damage incurred during the shipment of the equipment and will not repair this damage under warranty.

1. Verify that a power cable is included in the box with the printer.

   Additional items may be included, depending on the options ordered with the printer.
2. If anything is missing, notify your authorized Zebra reseller.
3. Immediately unwrap the printer and inspect for shipping damage.
   - Save all packing materials.
   - Check all exterior surfaces for damage.
   - Raise the media door, and inspect the media compartment for damage to components.
4. If you discover shipping damage upon inspection:
   - Immediately notify the shipping company and file a damage report.
   - Keep all packaging material for shipping company inspection.
   - Notify your authorized Zebra reseller.
5. The printer shipped with several protective items for shipping, including a film of plastic over the transparent window on the media door. Before operating the printer, remove these protective items.



zebracod.ir

# Connecting the Printer to a Device

After you have set up the printer, you are ready to connect the printer to your device (such as a computer, phone, or tablet).

## Connect to a Phone or Tablet

Download the free Zebra Printer Setup Utility app for your device.

- Android devices
- Apple devices

The applications support the following types of connectivity:

- Bluetooth Classic
- Bluetooth Low Energy (Bluetooth LE)
- Wired/Ethernet
- Wireless
- USB On-The-Go

For the User Guides for these printer setup utilities, go to zebra.com/setup.

## Installing Drivers and Connecting to a Windows-Based Computer

To use your printer with a Microsoft Windows-based computer, you must install the correct drivers first.

**IMPORTANT:** You may connect your printer to your computer using any of the connections that you have available. However, do not connect any cables from your computer to the printer until you are instructed to do so. If you connect them at the wrong time, your printer will not install the correct printer drivers. To recover from incorrect driver installation, see What to Do If You Forget to Install Printer Drivers First on page 31.

### Installing the Drivers

Follow these steps to install the correct drivers.

1. Navigate to zebra.com/drivers.
2. Click **Printers**.
3. Select your printer model.
4. On the printer product page, click **Drivers**.
5. Download the appropriate driver for Windows.

   The driver executable file (such as `zd86423827-certified.exe`) is added to your Download folder.



zebracod.ir

6. Run the executable file and follow the prompts.

   When setup is complete, you may select to add all of the drivers to your system (**Configure System**) or to add/configure specific printers (see Running the Printer Installation Wizard on page 21).

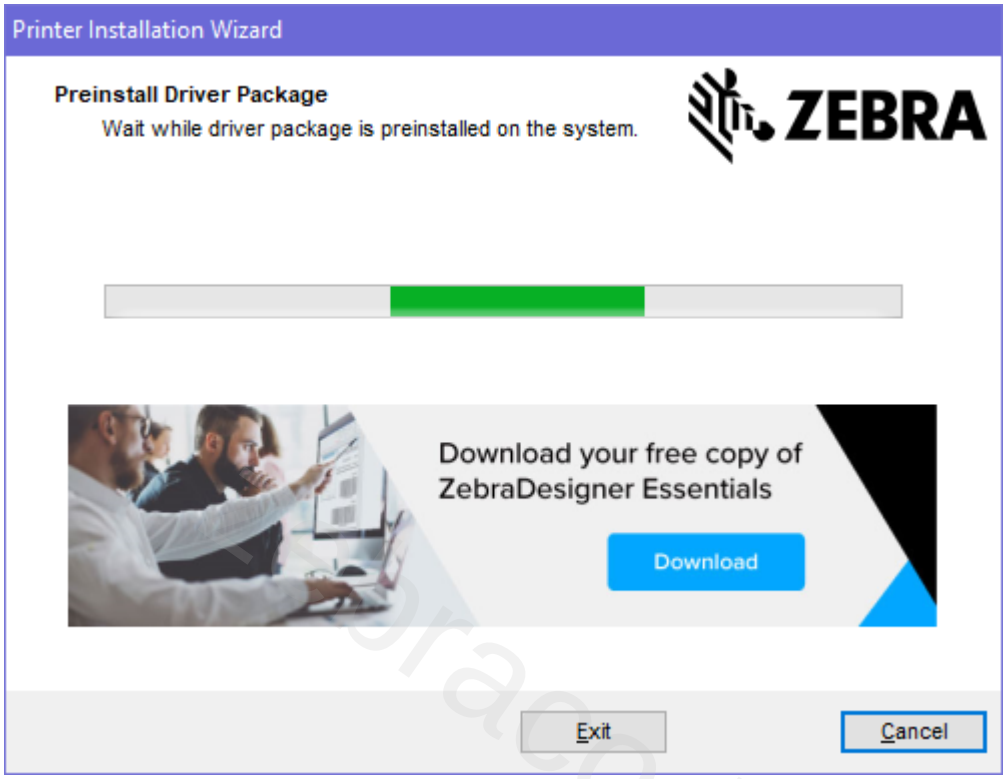


zebracod.ir



zebracod.ir

7. Select **Configure System**, and then click **Finish**.

   The Printer Installation Wizard installs the drivers.

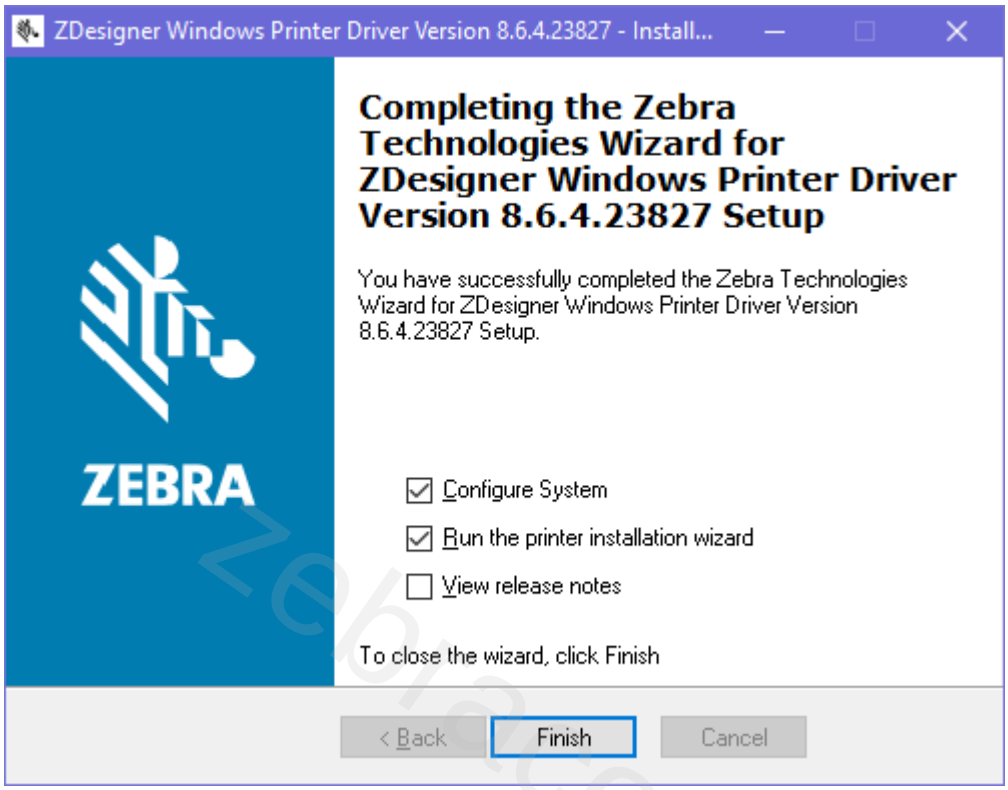


zebracod.ir



zebracod.ir

## Running the Printer Installation Wizard

1. On the last screen of the driver installer, leave **Run the Printer Installation Wizard** checked, and then click **Finish**.

   The Printer Installation wizard displays.

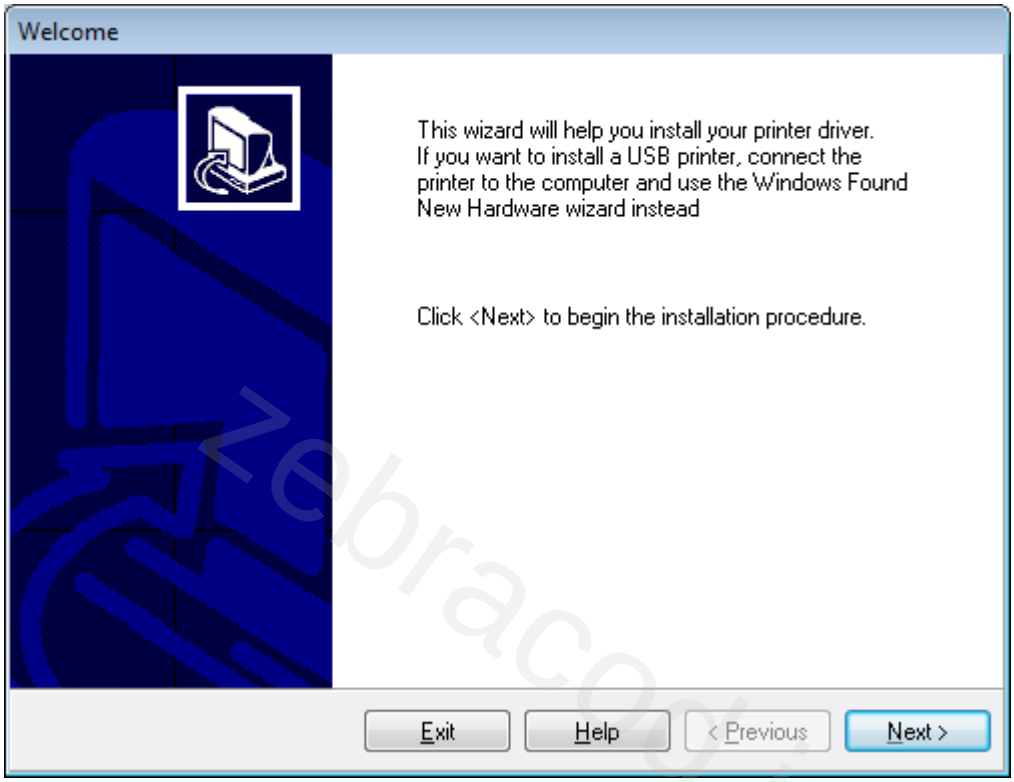


zebracod.ir



zebracod.ir

**2.** Click **Next**.

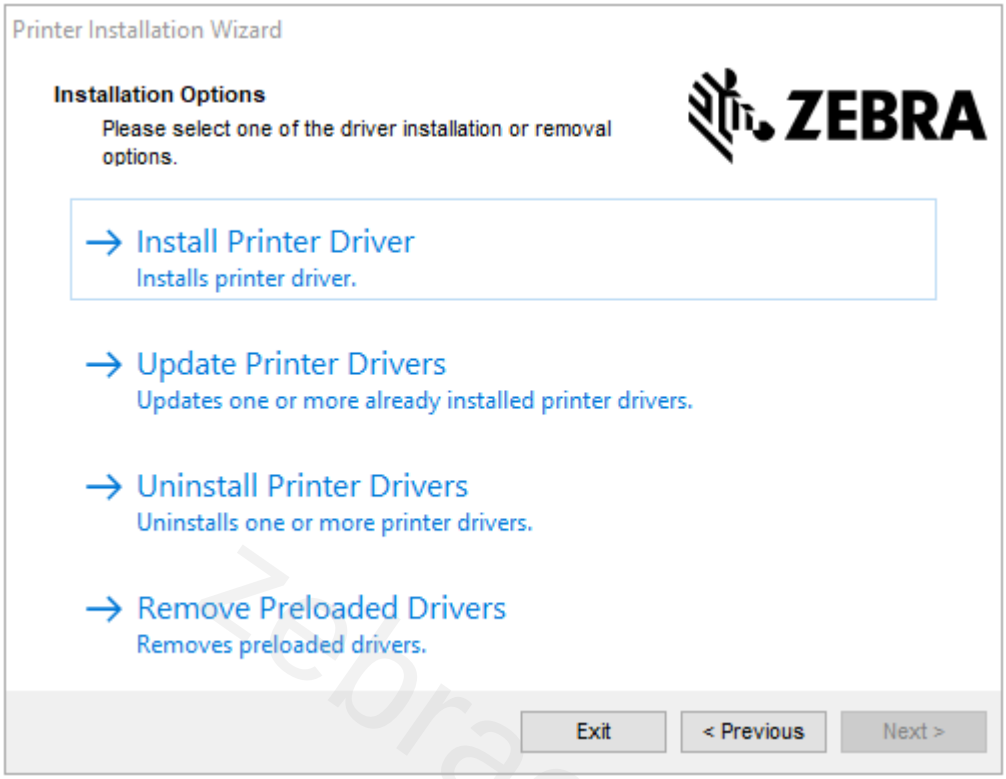


zebracod.ir



zebracod.ir

3. Click **Install Printer Driver**.

   The license agreement displays.

zebracod.ir

4. Read and accept the terms of the license agreement, and then click **Next**.

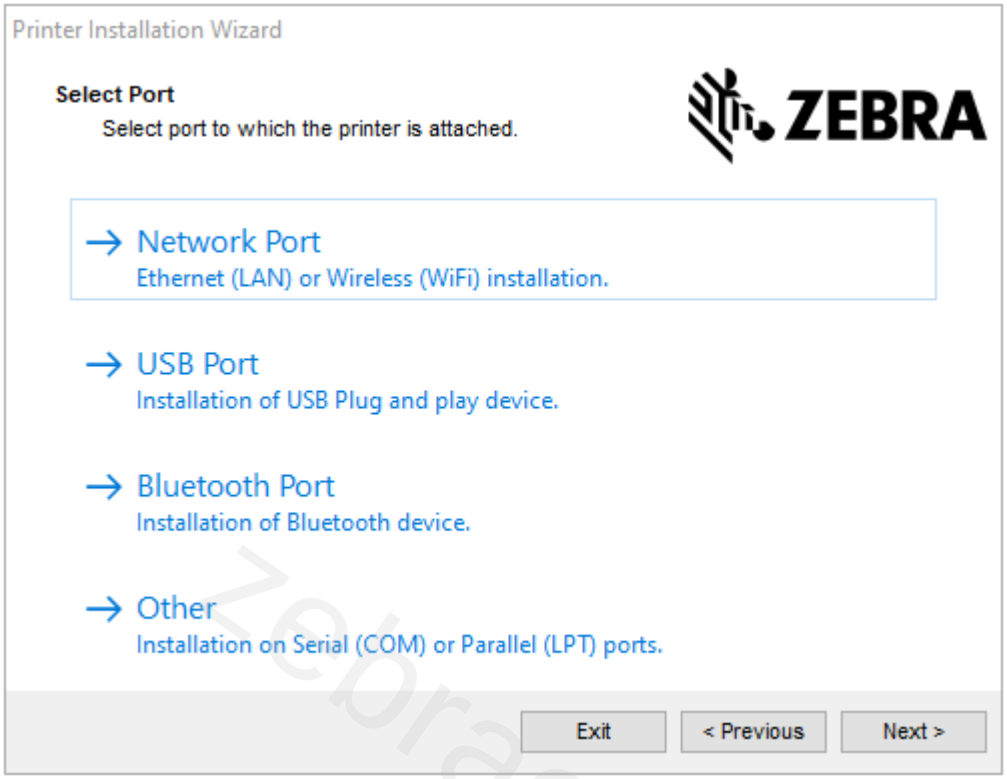


5. Select the communication option that you want to configure for your printer:
   - Network Port—For installing printers with an Ethernet (LAN) or wireless (Wi-Fi) network connection. Wait for the driver to scan your local network for devices and follow the prompts. If necessary, set the values as directed in Connecting to Your Network through the Printer's Ethernet Port on page 27 or in Connecting the Printer to Your Wireless Network on page 29.
   - USB Port—For installing printers connected with the USB cable. Connect the printer to the computer as shown in Connecting to a Computer Using the Printer's USB Port on page 25. If the printer is already connected and powered on, you may need to remove the USB cable and install it again. The driver will automatically search for the model of the connected printer.
   - Bluetooth Port—For installing printers with a Bluetooth connection. See Bluetooth Settings on page 120.
   - Other—For installation using another type of cable, such as Parallel (LPT) and Serial (COM). No additional configuration is necessary.



zebracod.ir

6. If prompted, select your printer model and resolution.

   The model and resolution are on a part number sticker on the printer, usually located below the media hanger. The information will be in the following format:

```
Part Number: XXXXXxY – xxxxxxxx
```

   where

   XXXXX = the printer model, and Y = the printer resolution (2 = 203 dpi, 3 = 300 dpi, 6 = 600 dpi).

   For example, in the part number ZT411x3 – xxxxxxxx, ZT411 indicates that the printer is a ZT411 model, and 3 indicates that the printhead resolution is 300 dpi.

## Connecting to a Computer Using the Printer's USB Port

1. After you install the drivers, remove the label that covers the USB port.

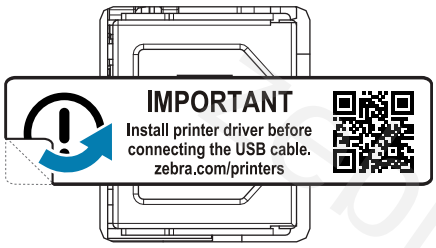


2. Connect the USB cord to the USB port on your printer.

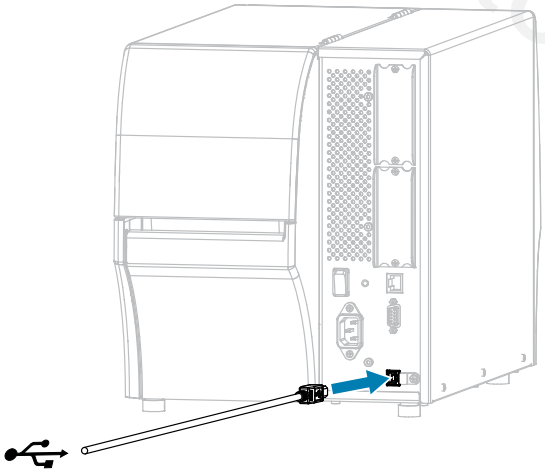

3. Connect the other end of the USB cord to your computer.



zebracod.ir

4. Plug the A/C power cord into the A/C power connector on the back of the printer.

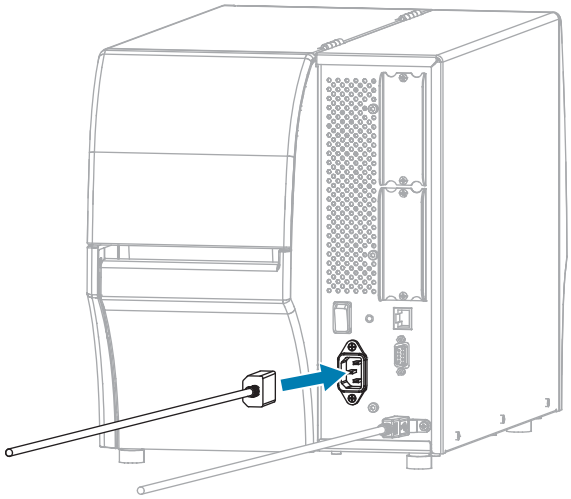

5. Plug the A/C power cord into an appropriate power outlet.

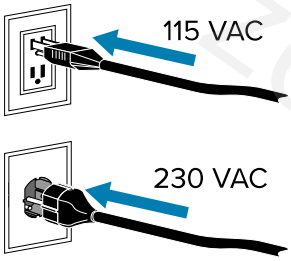


6. Turn on (**I**) the printer.

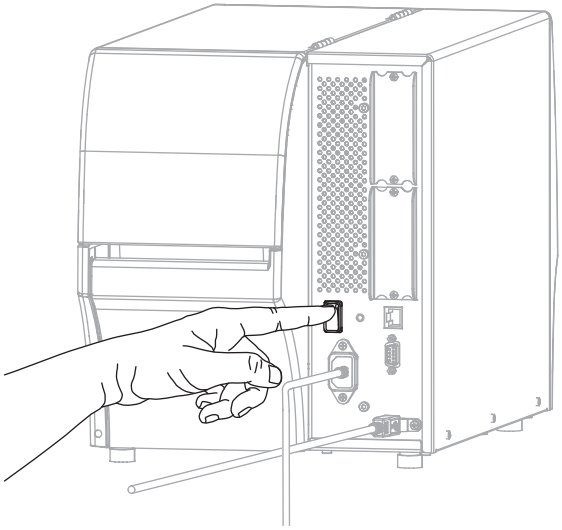

As the printer boots up, your computer completes the driver installation and recognizes your printer.

If you did not install the drivers first, see What to Do If You Forget to Install Printer Drivers First on page 31.



zebracod.ir

## Connecting to Your Network through the Printer's Ethernet Port

To use a wired print server (Ethernet) connection, you may need to configure the printer to communicate with your Local Area Network (LAN).

For additional information about Zebra print servers, refer to the ZebraNet Wired and Wireless Print Server User Guide. To download the latest version of this guide, go to zebra.com/manuals.

1. After you install the drivers (Installing the Drivers on page 18), connect the printer to an Ethernet cable that is connected to your network.

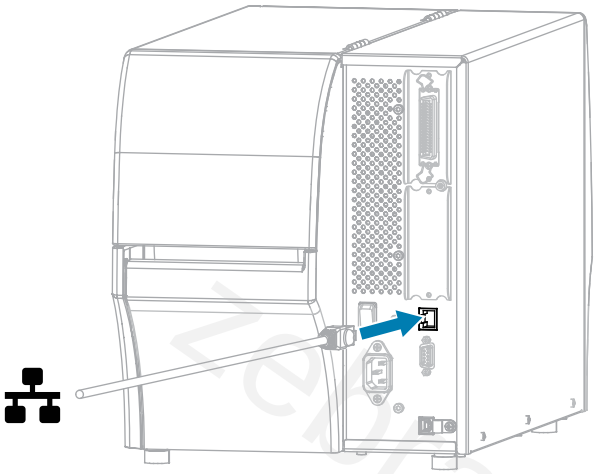

2. Plug the A/C power cord into the A/C power connector on the back of the printer.

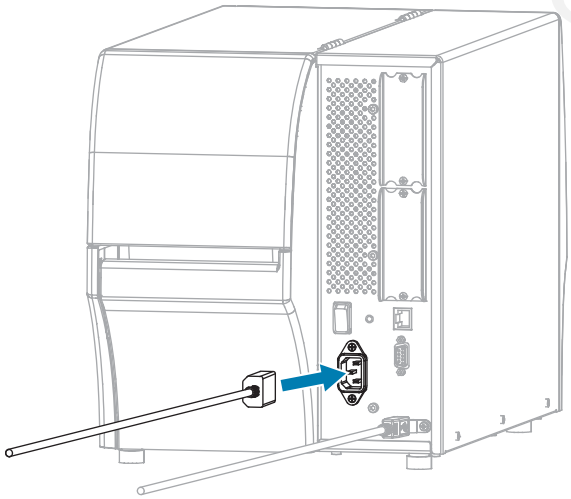



zebracod.ir

3. Plug the A/C power cord into an appropriate power outlet.

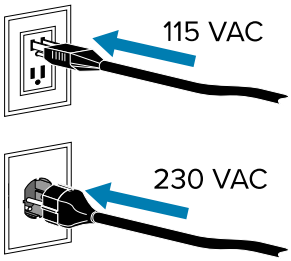


4. Turn on (**I**) the printer.

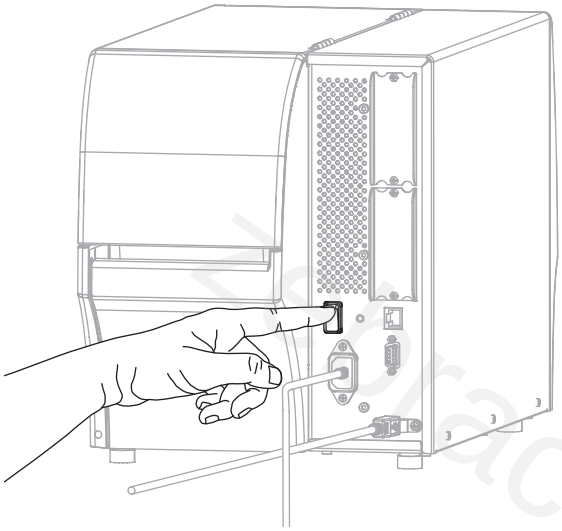

The printer attempts to communicate with your network. If it is successful, it fills in your LAN's gateway and subnet values and gets an IP address.



zebracod.ir

5. Check the display to see if an IP address was assigned to the printer. See IP Address in Network Settings on page 96 for ways to view the IP address.

| If the printer's IP address is... | Then... |
|---|---|
| `0.0.0.0`<br>or<br>`000.000.000.000` | The NETWORK light is off or displays steady red. (See Indicator Lights on page 160 for more information.)<br>Configure the following printer settings. Contact your network administrator for the proper values for your network.<br>**a.** Check the Ethernet connector on the back of the printer. If no light is on or blinking, the Ethernet connection is not active. Check that both ends of the cord are plugged in correctly and that the network port that you are plugging into is active. When this issue is resolved, the printer should connect automatically.<br>**b.** If necessary, configure the following printer settings to set a static IP address and then reset the network. Contact your network administrator for the proper values for your network.<br>• Network Settings > IP Protocol > Wired IP Protocol—Change the value from ALL to PERMANENT.<br>• Network Settings > Gateway > Wired Gateway—Match the gateway value of your LAN.<br>• Network Settings > Subnet Mask > Wired Subnet Mask—Match the subnet value of your LAN.<br>• Network Settings > IP address > Wired IP Address—Assign a unique IP address to the printer. |
| any other value | The connection was successful. The NETWORK light displays steady green or yellow, depending on the network. (See Indicator Lights on page 160 for more information.) |

6. Reset the network (see Reset Network) to allow changes to the network settings to take effect.

## Connecting the Printer to Your Wireless Network

If you wish to use the printer's optional wireless print server, you may need to configure the printer to communicate with your Wireless Local Area Network (WLAN) through the wireless print server.

For additional information about Zebra print servers, refer to the ZebraNet Wired and Wireless Print Server User Guide. To download the latest version of this guide, go to zebra.com/manuals.

1. Install the drivers as instructed in Installing Drivers and Connecting to a Windows-Based Computer on page 18.
2. If necessary, specify the ESSID value that matches the value used by your wireless router. Check with your network administrator for the ESSID value to use. See ESSID in Network Settings for ways to change the value.



zebracod.ir

3. If necessary, configure the following printer settings. Contact your network administrator for the proper values for your network.
   - Network Settings > WLAN Gateway—Match the gateway value of your LAN.
   - Network Settings > WLAN Subnet—Match the subnet value of your LAN.
4. Reset the network. See Reset Network in Network Settings.
5. If the printer still does not connect, consider setting a static IP address by configuring the following additional settings, and then reset the network again. Contact your network administrator for the proper values for your network.
   - Network Settings > WLAN IP Protocol—Change the value from ALL to PERMANENT.
   - Network Settings > IP Address > WLAN IP Address—Assign a unique IP address to the printer.

## Connecting the Printer to a Serial or Parallel Port on Your Computer

1. Connect the cable to the appropriate port on your printer.

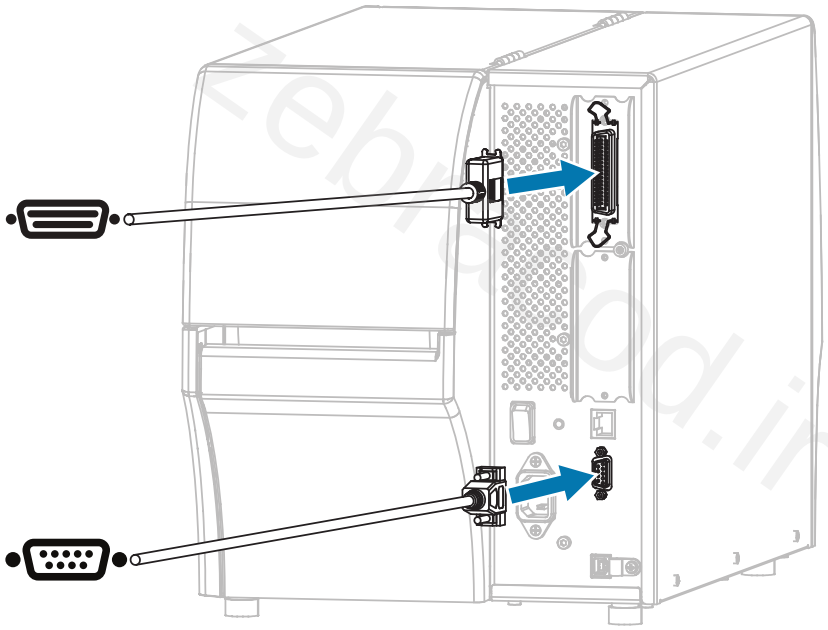

2. Connect the other end of the cord to the appropriate port on your computer.



zebracod.ir

3. Plug the female end of the A/C power cord into the A/C power connector on the back of the printer.

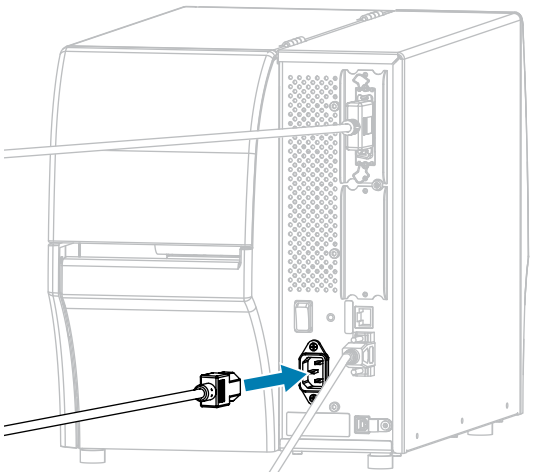

4. Plug the male end of the A/C power cord into an appropriate power outlet.

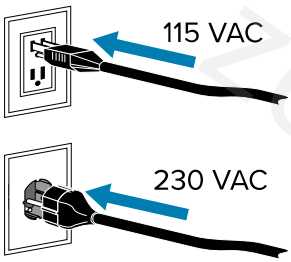


5. Turn printer power ON and after the printer boots up, if necessary, adjust the printer's port settings to match those of your computer. For details on the settings, see Network Settings on page 96.

This completes the serial or parallel port connections.

## What to Do If You Forget to Install Printer Drivers First

If you plug in your Zebra printer before installing the drivers, the printer displays as an Unspecified device.

1. Follow the instructions in Installing Drivers and Connecting to a Windows-Based Computer on page 18 to download and install the drivers.
2. From the Windows menu, open the Control Panel.
3. Click **Devices and Printers**.

   In this example, the MZ320 is an incorrectly installed Zebra printer.

zebracod.ir

**4.** Right-click on the device, and select **Properties**.

The properties for the device display.

**5.** Click the **Hardware** tab.

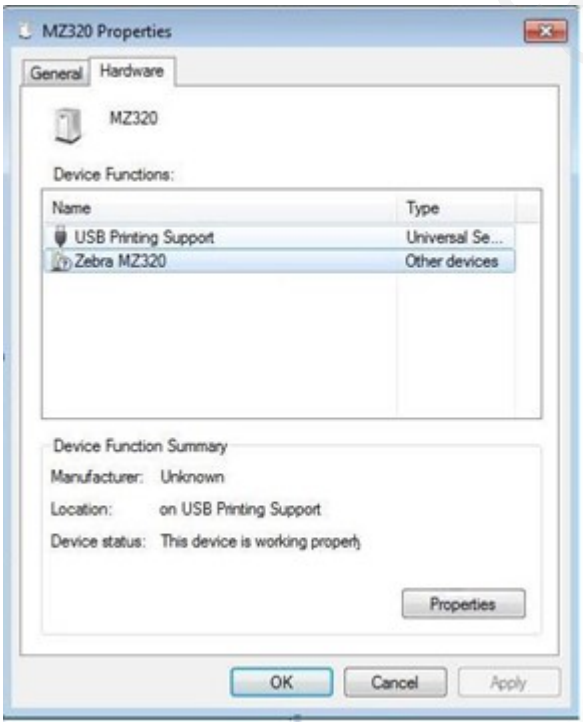




zebracod.ir

6. Select the Zebra printer in the **Device Functions** list, and then click **Properties**.

   The properties display.

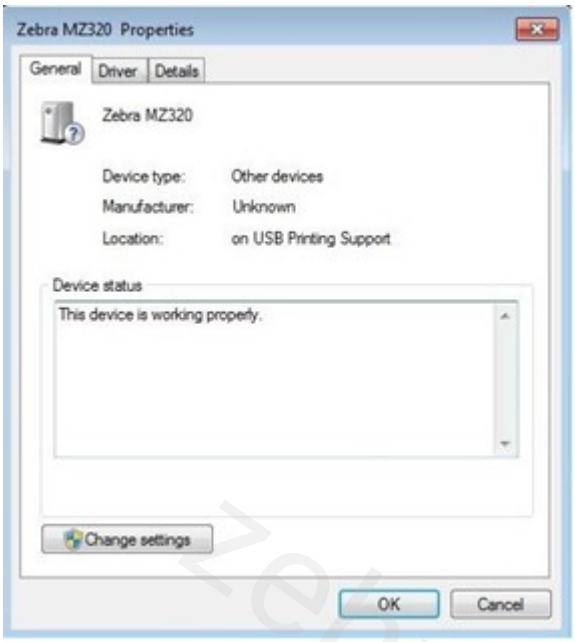


7. Click **Change settings** and then click the **Driver** tab.

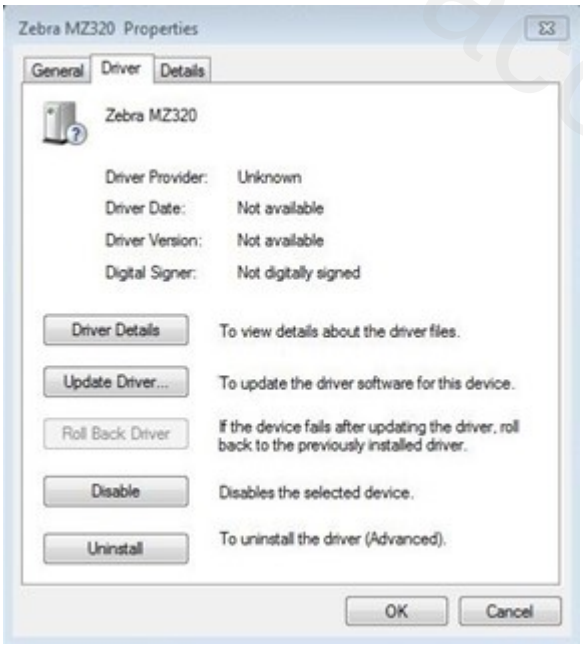




zebracod.ir

8. Click **Update Driver**.

9. Click **Browse my computer for driver software**.
10. Click **Browse...** and navigate to the Downloads folder.
11. Click **OK** to select the folder.

12. Click **Next**.

The device is updated with the correct drivers.

## Selecting a Print Mode

Use a label collection method that matches the media being used and the printer options available using the table and figures included in  this section.

The media path is the same for roll and fanfold media.



zebracod.ir

1. Press **LEFT SELECT** to access the printer's Home menu.
2. Press **OK** to select the SETTINGS menu.
3. Use the **LEFT ARROW** or **RIGHT ARROW** to navigate to Print Mode.
4. Select a print mode that is compatible with the options available on your printer.

   For information on the options, see Printer Options on page 7.

| Print Mode | Required Printer Option | Description |
|---|---|---|
| Tear Off | Can be used with any printer option and most media types. | The printer prints label formats as it receives them. The printer operator can tear off the printed labels when the printer stops. |
| Peel Off | Peel, Liner Take-Up, or Rewind option | The printer peels the label from the backing during printing and then pauses until the label is removed. The empty backing may be allowed to exit the front of the printer, or it may be wound onto the liner take-up spindle or rewind spindle. |
| Rewind | Rewind option | The printer prints without pausing between labels. The media is wound onto a core after printing. The rewind plate is used to keep the labels from separating from the backing. |
| Cutter | Cutter option | The printer cuts between labels after each one is printed. |
| Delayed Cut | Cutter option | The printer waits for a delayed cut ZPL command (~JK) before it cuts the last printed label. |
| Applicator | Applicator port connection required. This mode is for use with a machine that applies labels. | The printer prints when it receives a signal from the applicator. Authorized Service Technicians should refer to the Advanced User Information section of the Maintenance Manual for additional information about the applicator interface. |
| **NOTE:** Linerless Peel, Linerless Rewind, Linerless Tear, Linerless Cut, and Linerless Delayed Cut are options reserved for future use. | | |

**See Also**

Settings

Media

## Loading the Media

Use the instructions in this section for loading roll or fanfold media in the appropriate label collection method for your needs.

**IMPORTANT:** You are not required to turn off the printer power when working near an open printhead, but Zebra recommends it as a precaution. If you turn off the power, you will lose all temporary settings, such as label formats, and you must reload them before you resume printing.



zebracod.ir

**NOTE:** The media path is the same for roll and fanfold media.

## Inserting the Media into the Printer

1. Raise the media door.

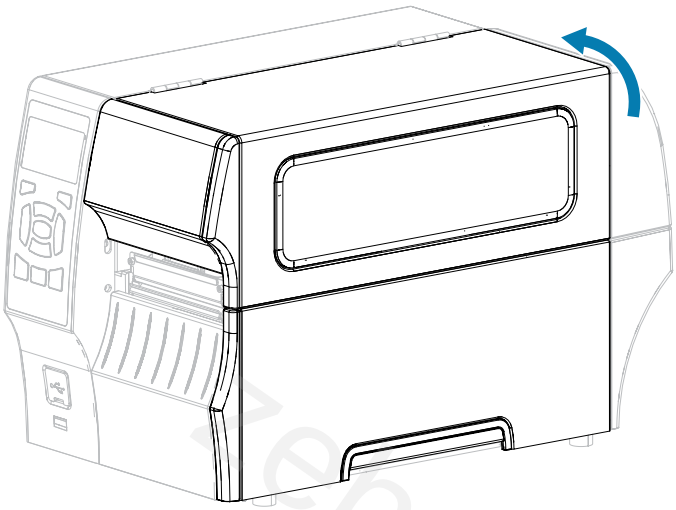

2. Remove and discard any tags or labels that are torn or dirty or that are held by adhesives or tape.

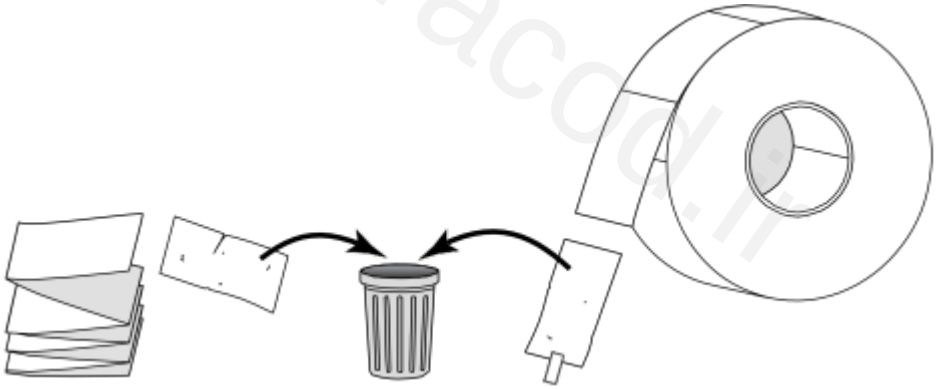

3. Pull out the media supply guide as far as it goes.

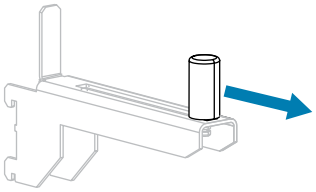



zebracod.ir

**4.** Insert roll or fanfold media into the printer. The media loading path is the same for both roll and fanfold media, so this is the only step that will be different.

| Type of media | Instructions |
|---|---|
| Roll media | Place the roll of media on the media supply hanger. Push the roll as far back as it will go. 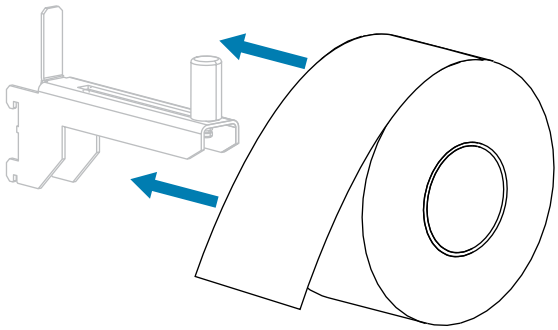 |
| Fanfold media | Fanfold media can be stored behind or under the printer.<br>Depending on where the media is stored, feed the media either from behind or through the bottom access slot, then drape it over the media supply hanger.<br>Rear feed 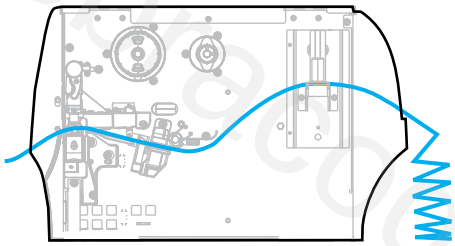 <br>Bottom feed 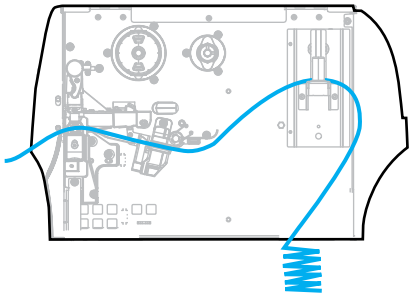 |

**5.** Which collection method are you using? (See Selecting a Print Mode on page 34.)

| If using... | Then... |
|---|---|
| **Tear Off** | Continue with Using Tear-Off Mode on page 39. |



zebracod.ir

| If using... | Then... |
|---|---|
| 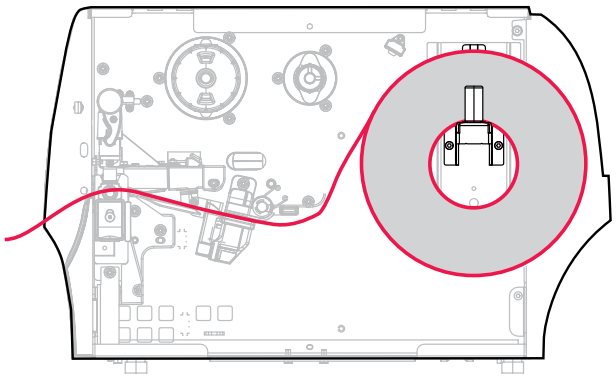 | |
| **Peel Off (with or without liner take-up)** 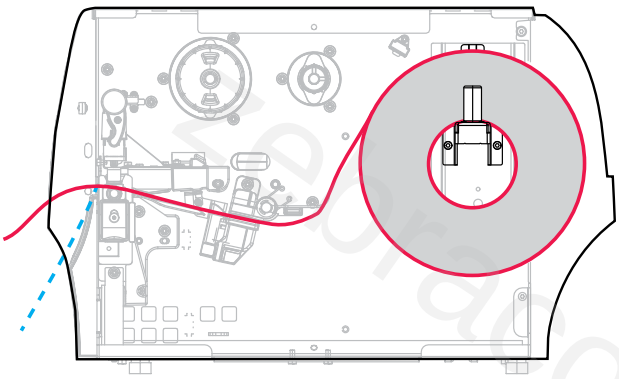 | Continue with Using Peel-Off Mode (with or without Liner Take-Up) on page 42. |
| **Rewind** 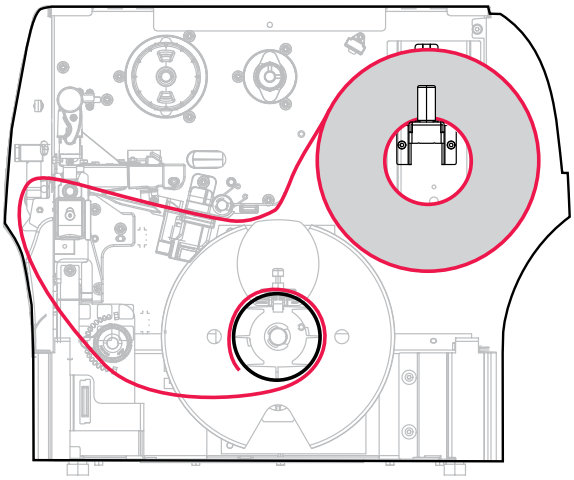 | Continue with Using Rewind Mode on page 52. |
| **Cutter or Delayed Cut** | Continue with Using Cutter Mode or Delayed Cut Mode on page 59. |



zebracod.ir

| If using... | Then... |
| --- | --- |
| 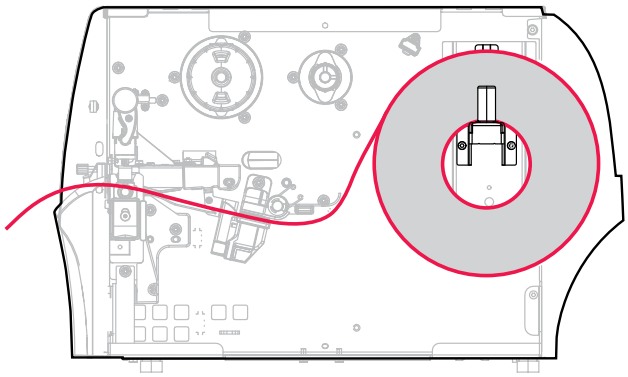 | |

## Using Tear-Off Mode

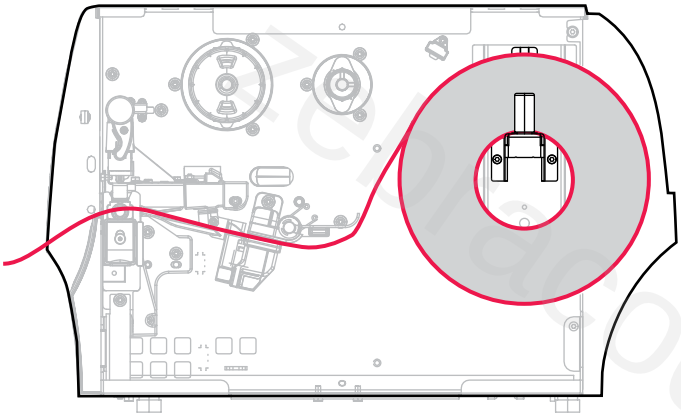

1. If you have not already done so, follow the instructions in the section Inserting the Media into the Printer on page 36.
2. Open the printhead assembly by rotating the printhead-open lever upward.

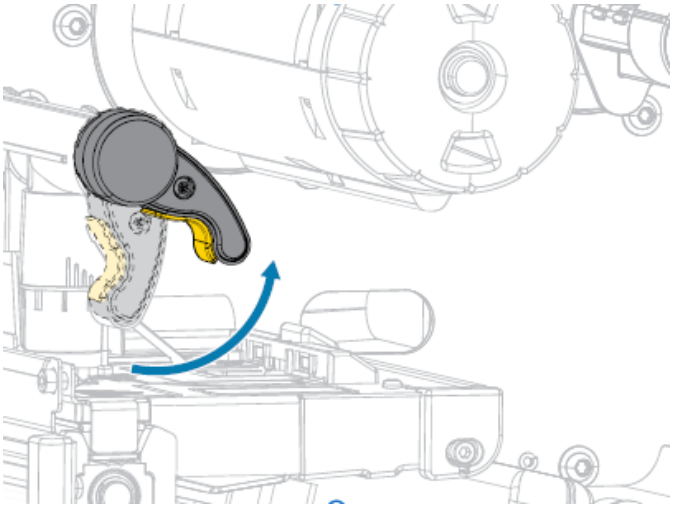



zebracod.ir

3. Slide the media guide all the way out.

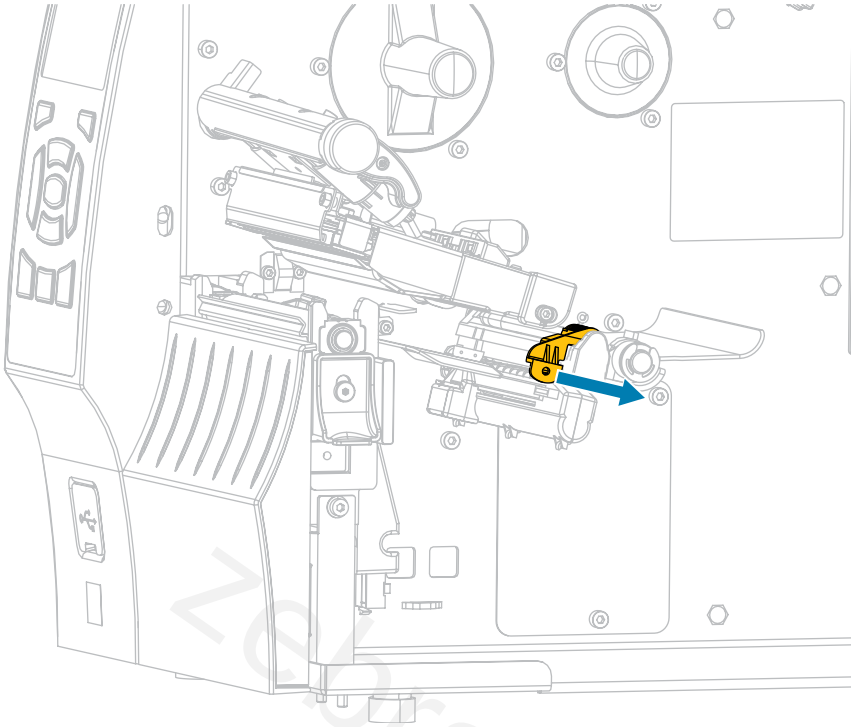

**CAUTION—HOT SURFACE:** The printhead may be hot and could cause severe burns. Allow the printhead to cool.

4. From the media hanger (1), feed the media under the dancer assembly (2), through the media sensor (3), and under the printhead assembly (4). Slide the media back until it touches the inside back wall of the media sensor.

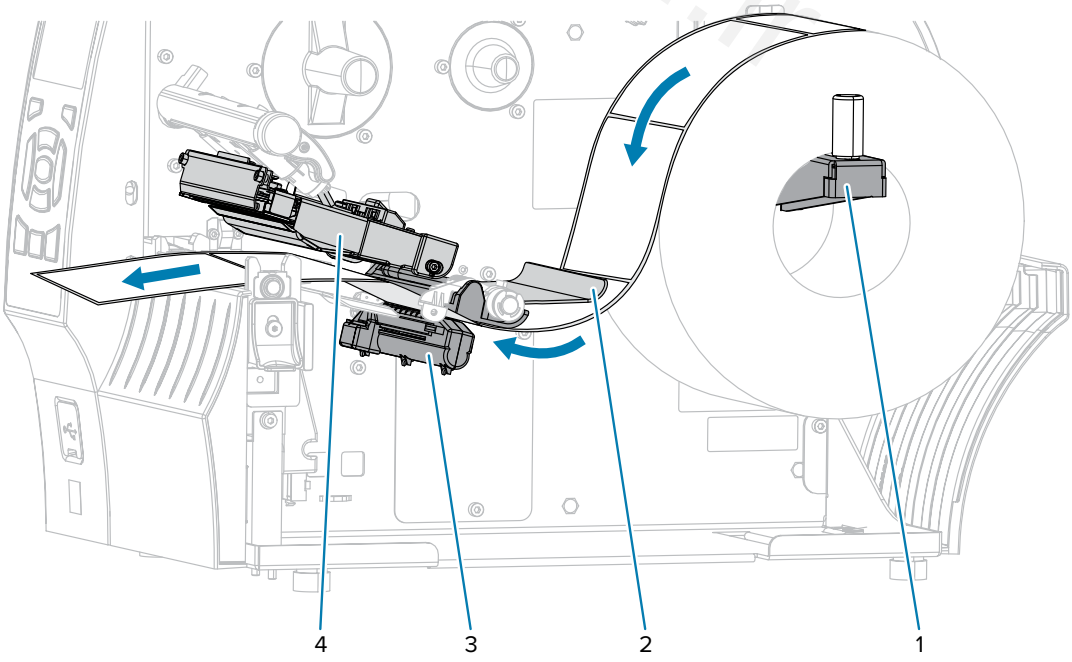




zebracod.ir

5. Slide in the media guide until it just touches the edge of the media.

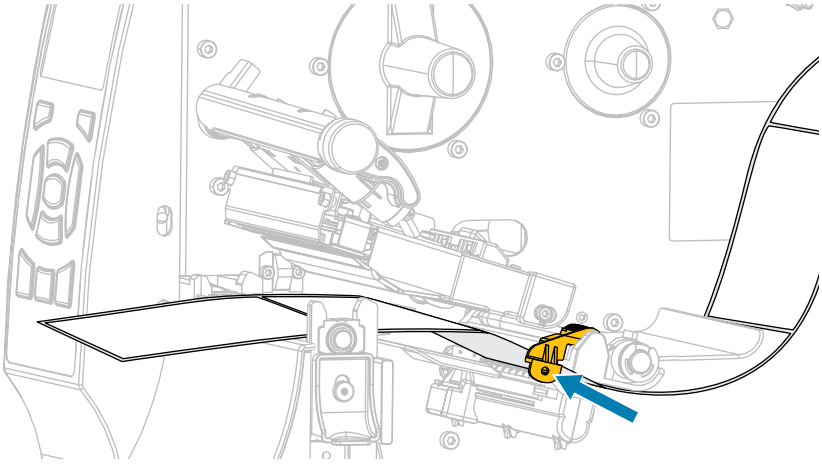

6. Does the media that you are using require ribbon for printing? If you are not sure, see Ribbon on page 16.

| If using... | Then... |
|---|---|
| Direct Thermal media (no ribbon needed) | Proceed to the next step. |
| Thermal Transfer media (ribbon needed) | If you have not already done so, load ribbon in the printer. See Loading the Ribbon on page 64. Then proceed to the next step. |

7. Rotate the printhead-open lever downward until it locks the printhead in place.

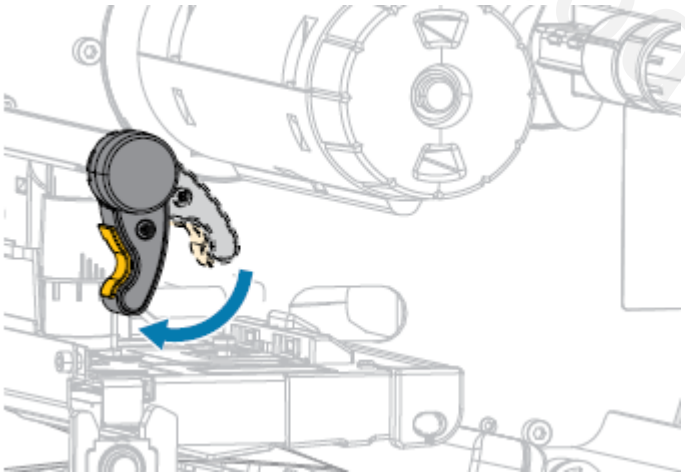



zebracod.ir

8. Close the media door.

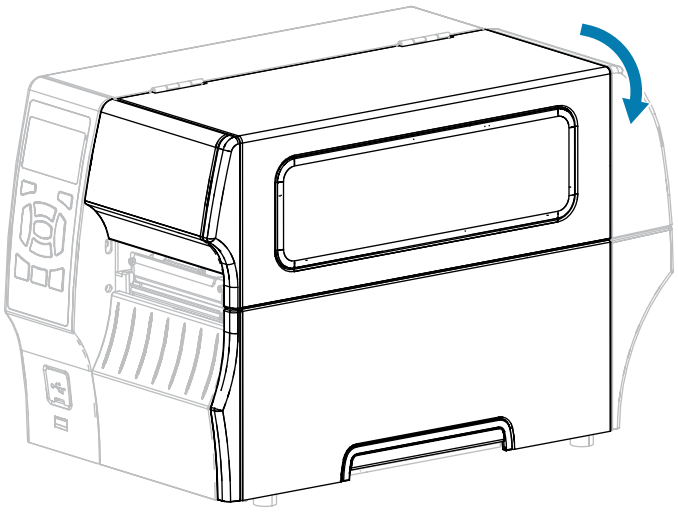

9. If you have not already done so, set the printer to TEAR OFF mode. See Selecting a Print Mode on page 34.

10. Press **PAUSE** ( ❚❚ ) to exit pause mode and enable printing.

    The printer may perform a label calibration or feed a label, depending on your settings.

11. For best results, calibrate the printer. See Calibrating the Ribbon and Media Sensors on page 122.

12. Verify that your printer is able to print a configuration label by holding both the **FEED** and **CANCEL** keys for 2 seconds.

## Using Peel-Off Mode (with or without Liner Take-Up)

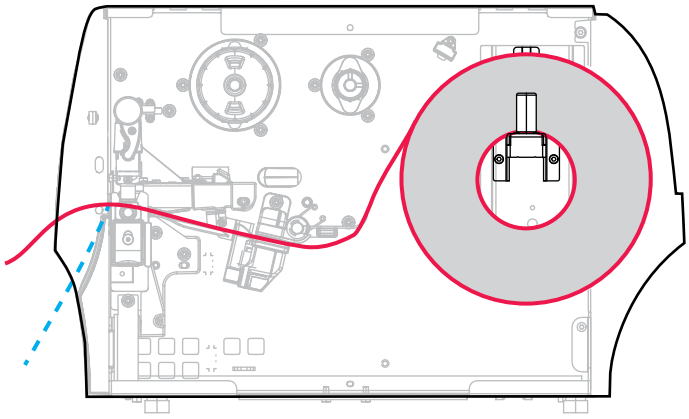

1. If you have not already done so, follow the instructions in the section Inserting the Media into the Printer on page 36.



zebracod.ir

2. Open the printhead assembly by rotating the printhead-open lever upward.

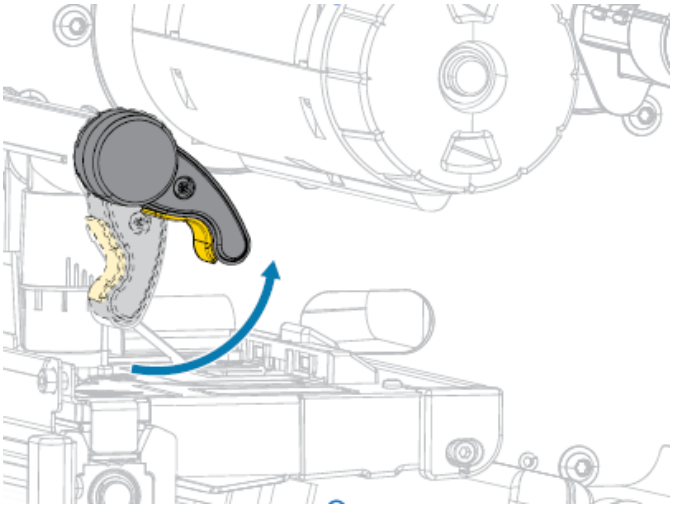

3. Slide the media guide all the way out.

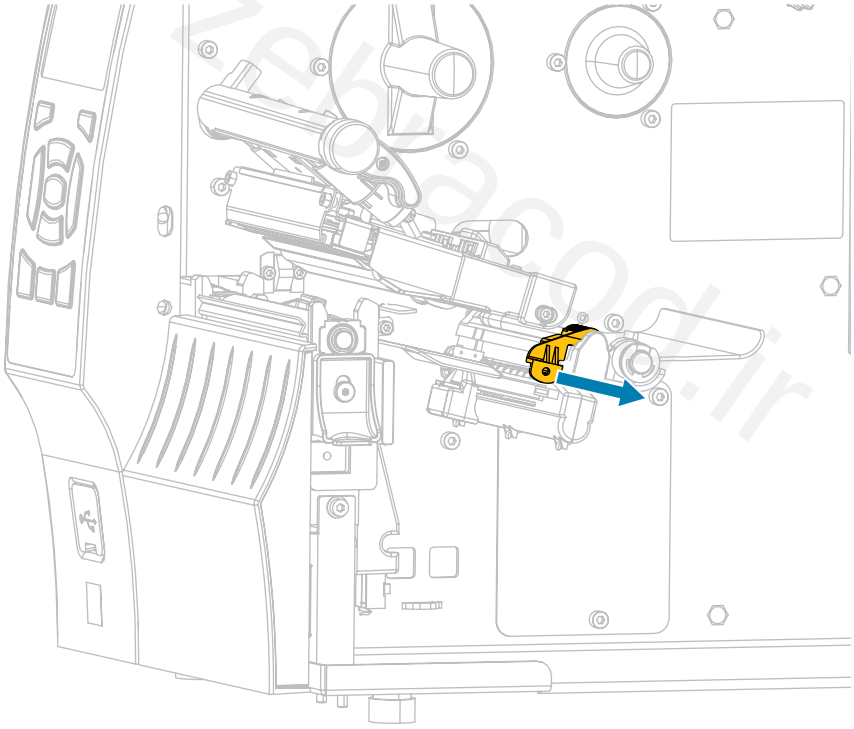



zebracod.ir

**4.** Push down the peel-off mechanism release lever to open the peel assembly.

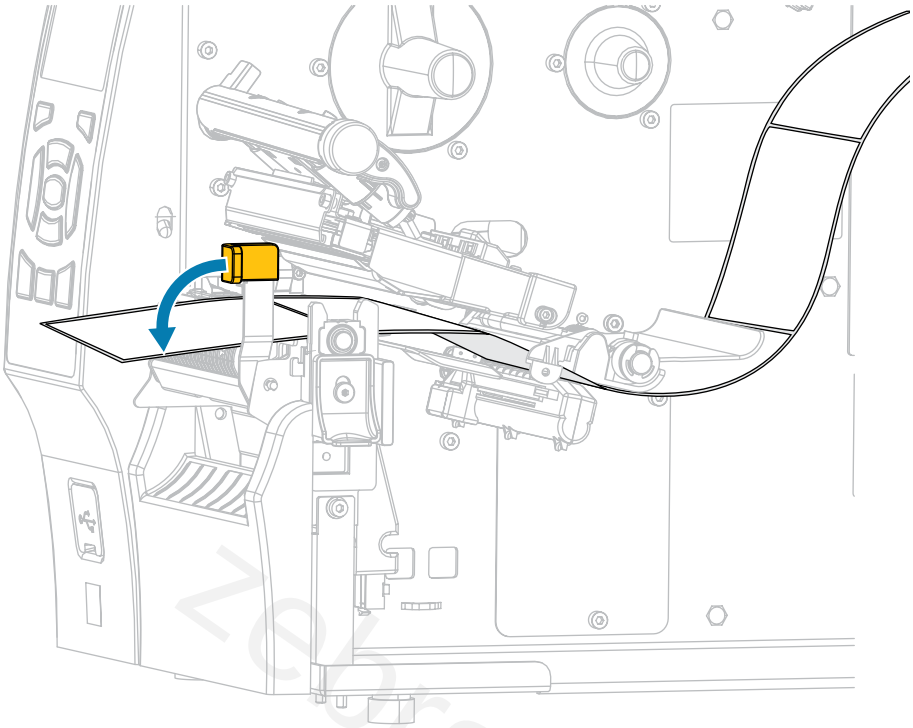

**CAUTION: HOT SURFACE:** The printhead may be hot and could cause severe burns. Allow the printhead to cool.

zebracod.ir



zebracod.ir

5. From the media hanger (1), feed the media under the dancer assembly (2), through the media sensor (3), and under the printhead assembly (4). Slide the media back until it touches the inside back wall of the media sensor.

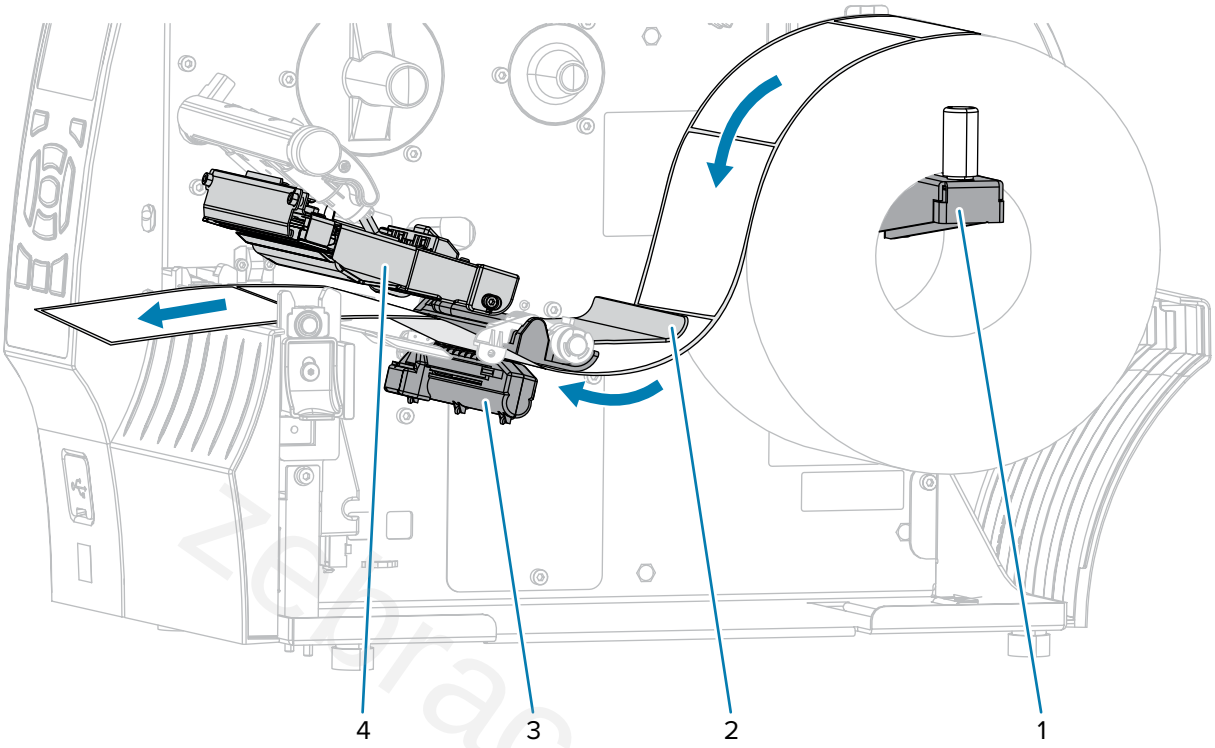


6. Extend approximately 18 in. (500 mm) of media out of the printer. Remove and discard the labels from this exposed media, leaving just the liner.

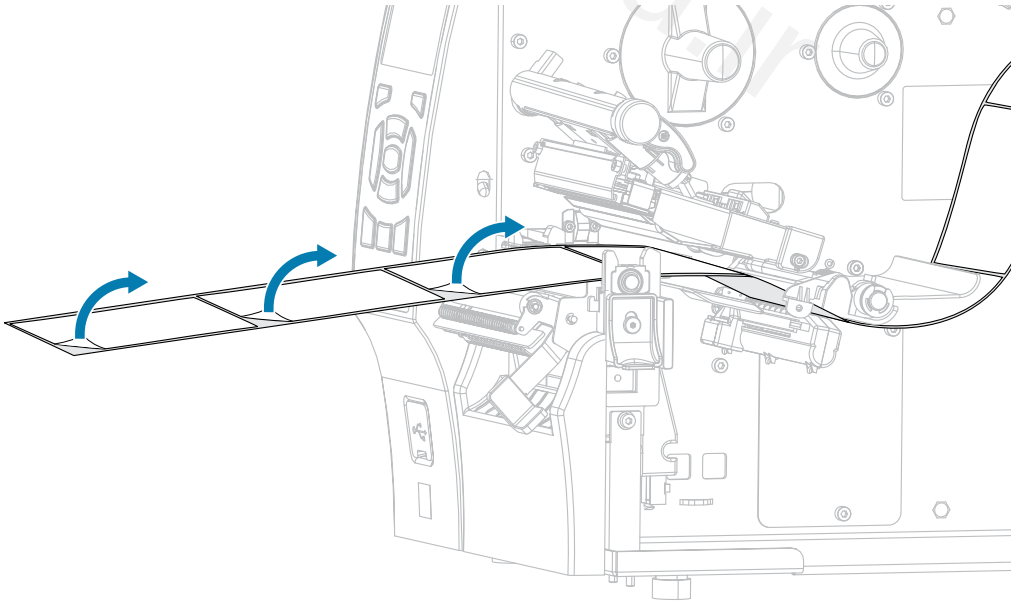



zebracod.ir

7. Feed the liner behind the peel assembly. Make sure that the end of the liner falls outside of the printer.

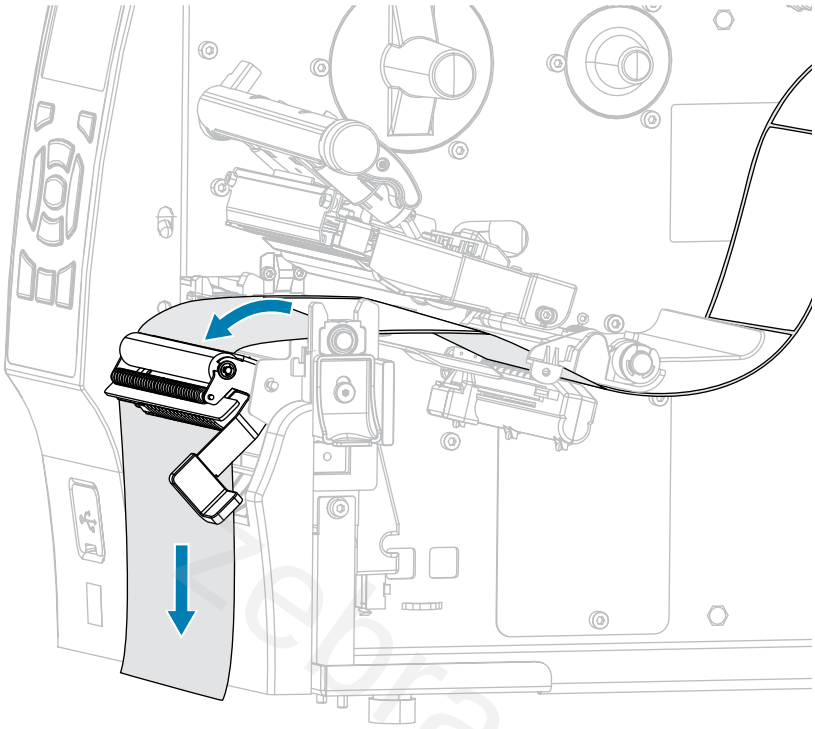

zebracod.ir



zebracod.ir

**8.** Complete this step only if you want to use Peel-Off mode with Liner Take-Up. Your printer must have the Liner Take-Up option or the Rewind option installed. Follow the instructions for your printer option. (If you are not using Liner Take-Up, skip this step and proceed to next step.)

| Rewind Option | Liner Take-Up Option |
|---|---|
| a. For both the Rewind option and the Liner Take-Up options: Thread the liner into the slot below the peel assembly. 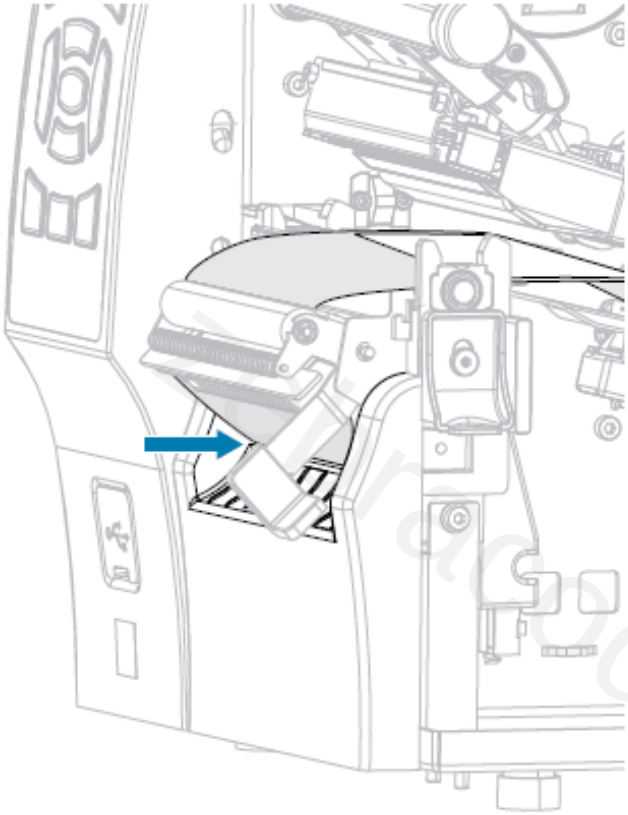 | |
| b. Feed the liner under the media alignment roller. 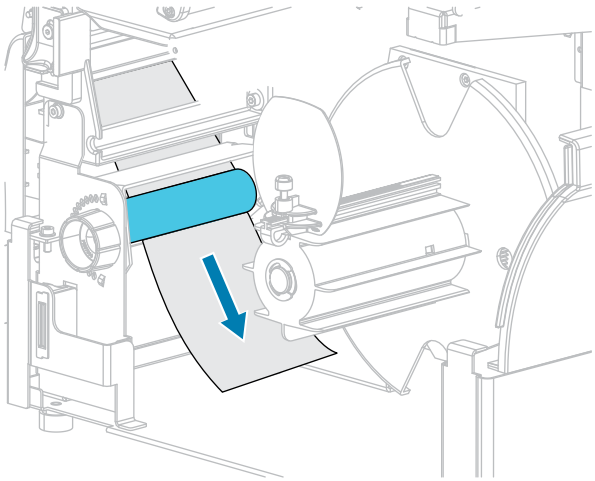 | b. Slide the liner into the slot in the liner take-up spindle. 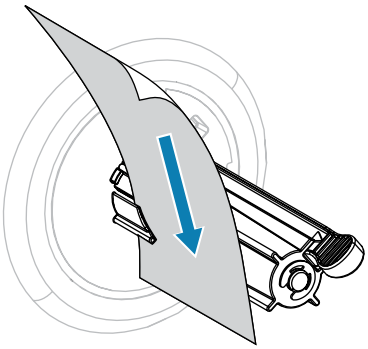 |



zebracod.ir

| Rewind Option | Liner Take-Up Option |
|---|---|
| c. Loosen the thumbscrew on the rewind media guide.<br> 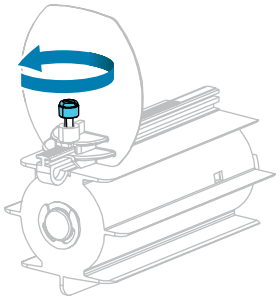 | c. Push the liner back until it touches the back plate of the liner take-up spindle assembly.<br> 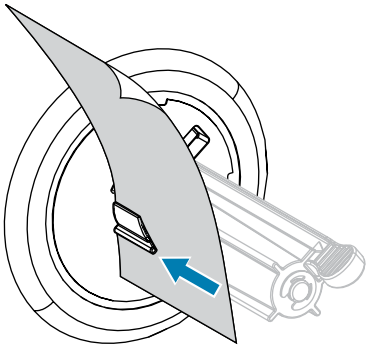 |
| d. Slide the rewind media guide all the way out, and then fold it down.<br> 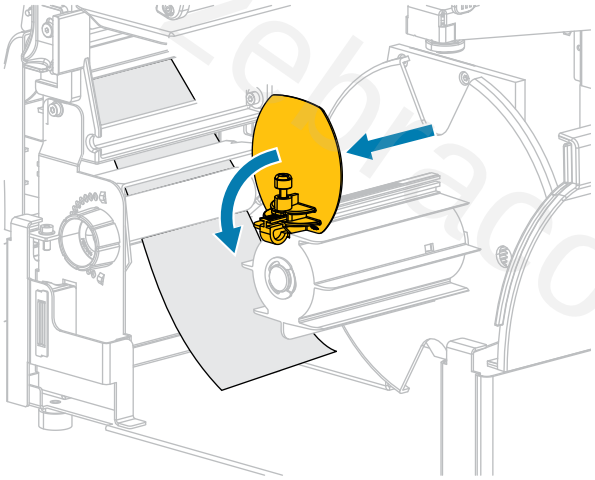 | d. Wrap the liner around the liner take-up spindle and turn the spindle counterclockwise to tighten the liner.<br> 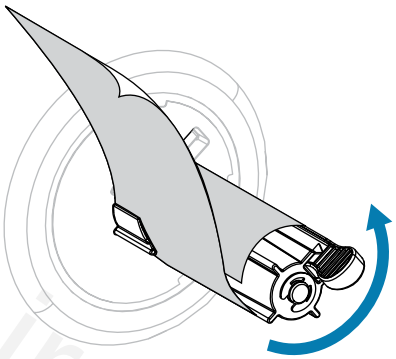 <br>For the Liner Take-Up option, loading of the liner is complete. Continue on to the next step. |
| e. Slide an empty core onto the rewind spindle.<br> 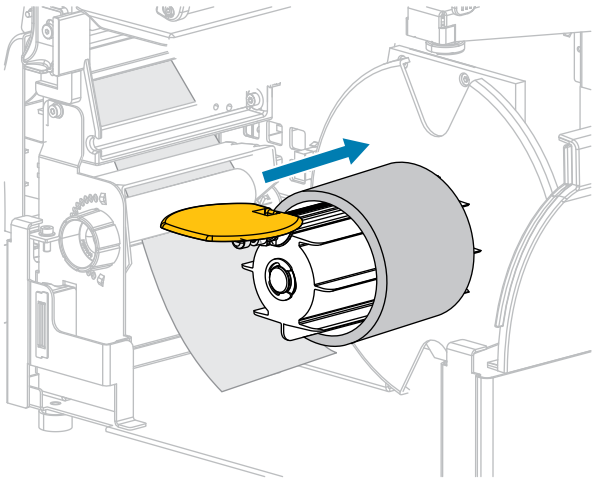 | |



zebracod.ir

| Rewind Option | Liner Take-Up Option |
|---|---|
| f. Wrap the liner around the core as shown, and then turn the rewind spindle to tighten the media.<br>Ensure that the edge of the media is flush against the backplate of the rewind spindle.<br> 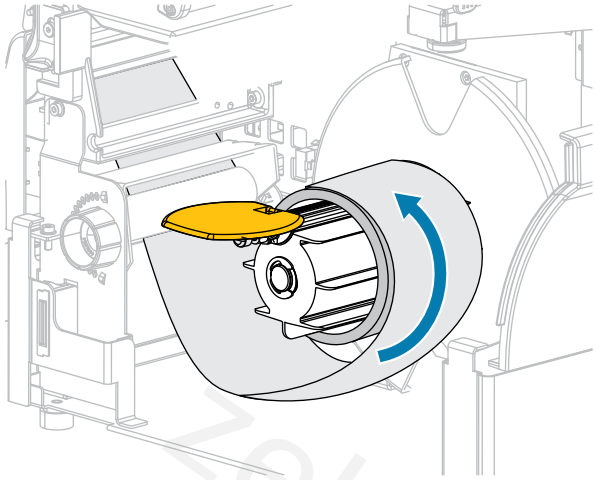 | |
| g. Fold up the rewind media guide, and then slide it in until it touches the liner.<br> 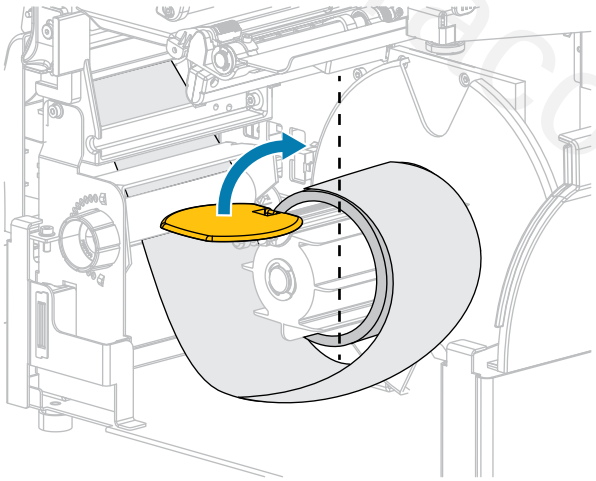 | |



zebracod.ir

| Rewind Option | Liner Take-Up Option |
|---|---|
| h. Tighten the thumbscrew on the rewind media guide.<br> 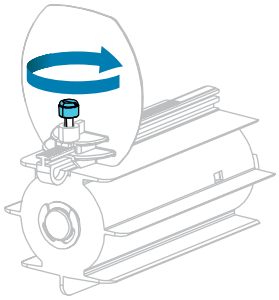 <br>Loading of the liner is complete. Continue with the next step. | |

**9.** Close the peel assembly using the peel-off mechanism release lever.

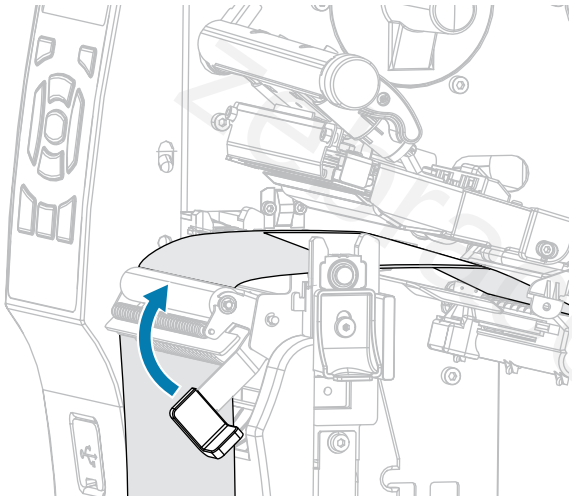

**10.** Slide in the media guide until it just touches the edge of the media.

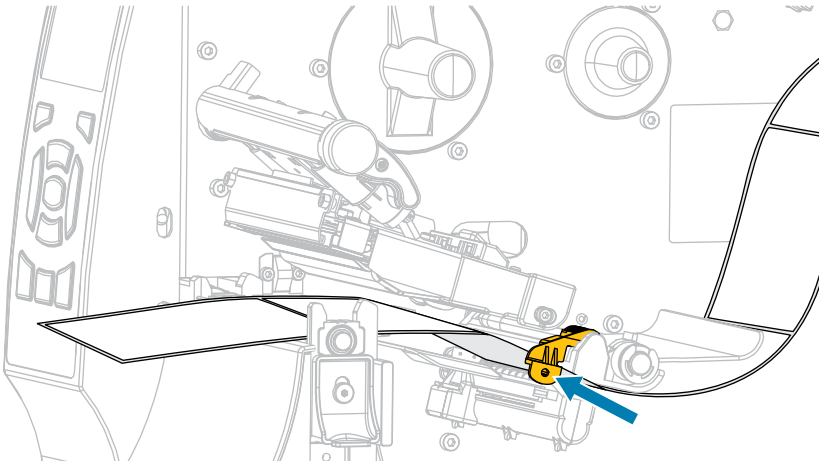



zebracod.ir

11. Does the media that you are using require ribbon for printing? If you are not sure, see Ribbon on page 16.

| If using... | Then... |
|---|---|
| Direct Thermal media (no ribbon needed) | Proceed to the next step. |
| Thermal Transfer media (ribbon needed) | If you have not already done so, load ribbon in the printer. See Loading the Ribbon on page 64. Then proceed to the next step. |

12. Rotate the printhead-open lever downward until it locks the printhead in place.

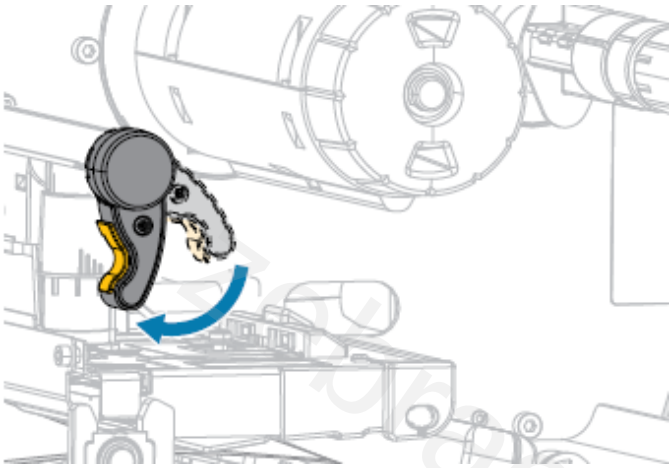

13. Close the media door.

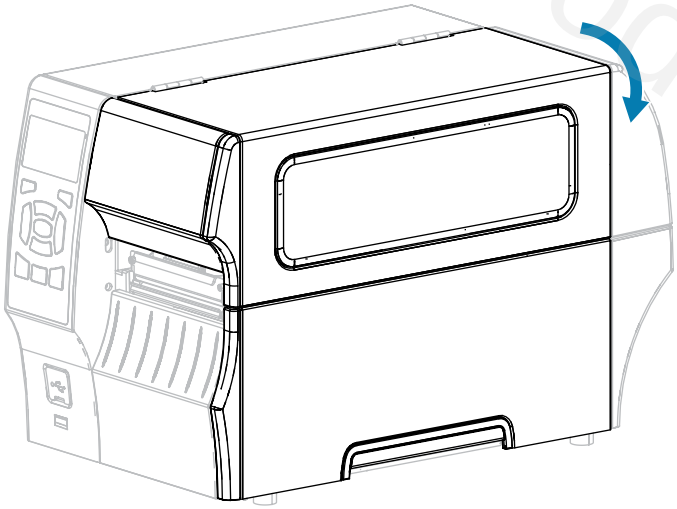

14. If you have not already done do, set the printer to the appropriate print mode. (See Selecting a Print Mode on page 34.)

15. Press **PAUSE** to exit pause mode and enable printing.

    The printer may perform a label calibration or feed a label, depending on your settings.

16. For optimal results, calibrate the printer. See Calibrating the Ribbon and Media Sensors on page 122.



zebracod.ir

17. Verify that your printer is able to print a configuration label by holding both the **FEED** and **CANCEL** keys for 2 seconds.

## Using Rewind Mode

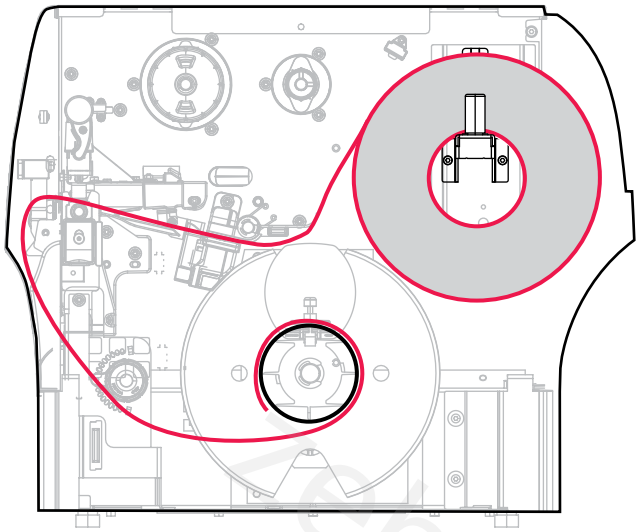

1. If you have not already done so, follow the instructions in Inserting the Media into the Printer on page 36.
2. Open the printhead assembly by rotating the printhead-open lever upward.

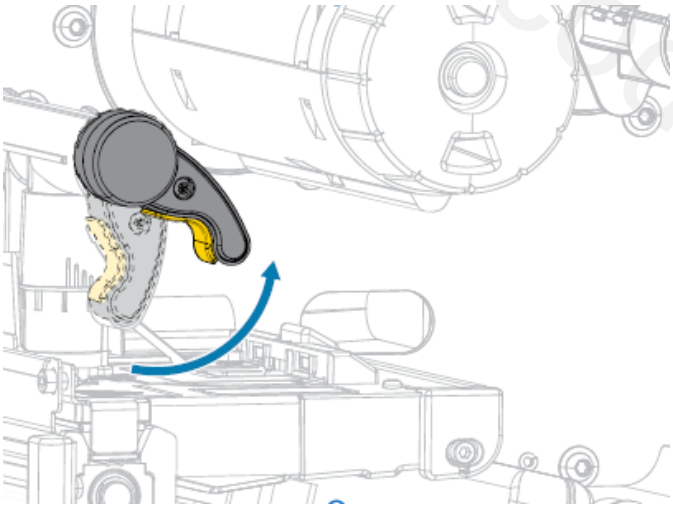



zebracod.ir

**3.** Slide the media guide all the way out.

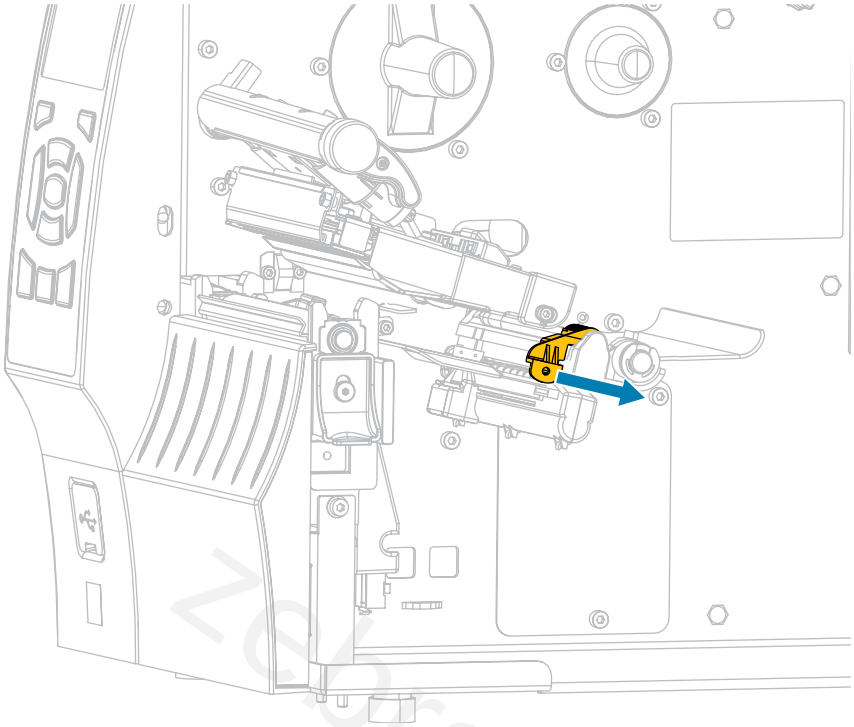

**CAUTION: HOT SURFACE:** The printhead may be hot and could cause severe burns. Allow the printhead to cool.

zebracod.ir



zebracod.ir

4. From the media hanger (1), feed the media under the dancer assembly (2), through the media sensor (3), and under the printhead assembly (4). Slide the media back until it touches the inside back wall of the media sensor.

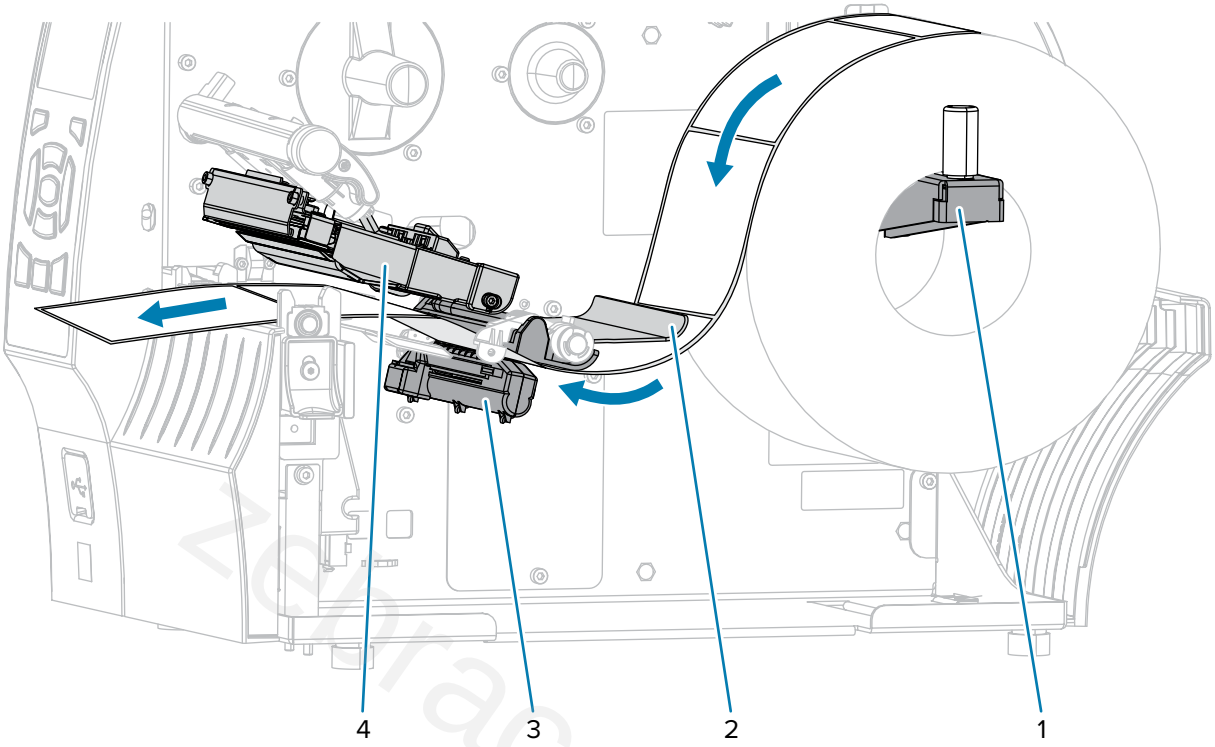


5. Extend the media approximately 18 in. (500 mm) out of the printer.

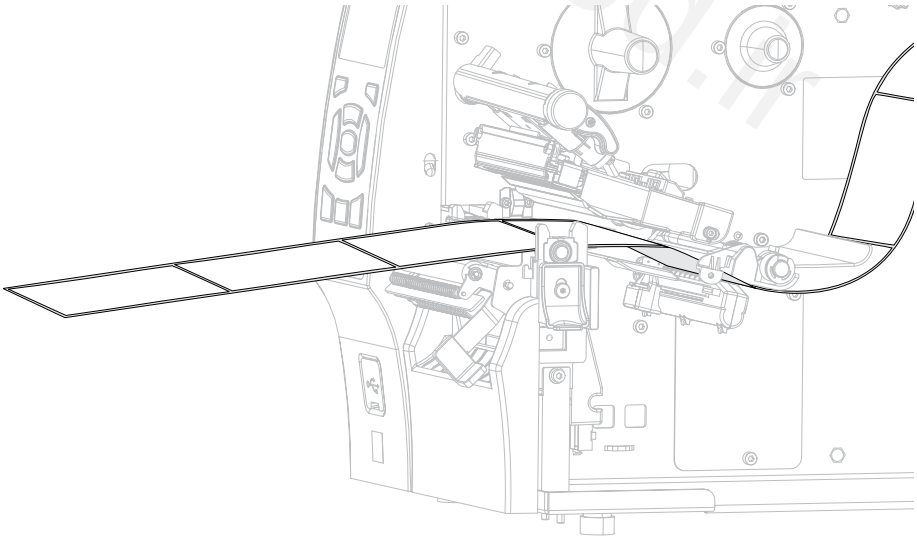



zebracod.ir

**6.** Feed the media over the peel assembly.

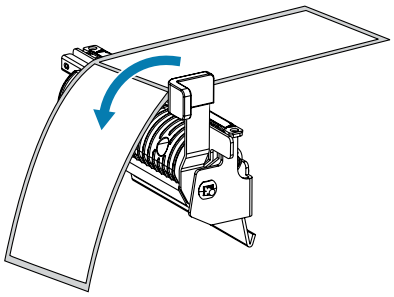

**7.** Thread the media into the slot below the peel assembly.

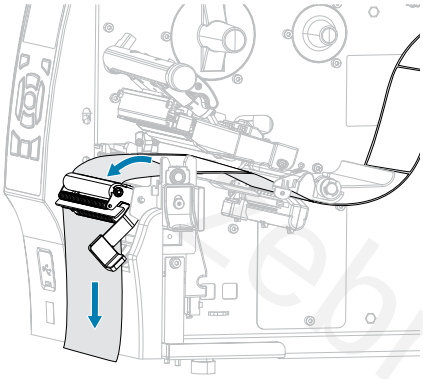

**8.** Feed the media under the media alignment roller.

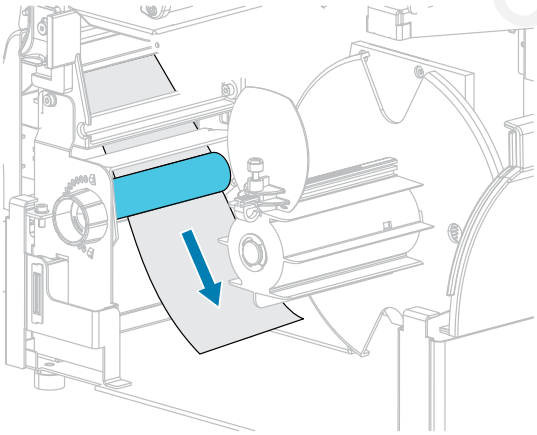

**9.** Loosen the thumbscrew on the rewind media guide.

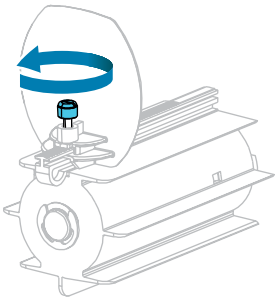



zebracod.ir

**10.** Slide the rewind media guide all the way out, and then fold it down.

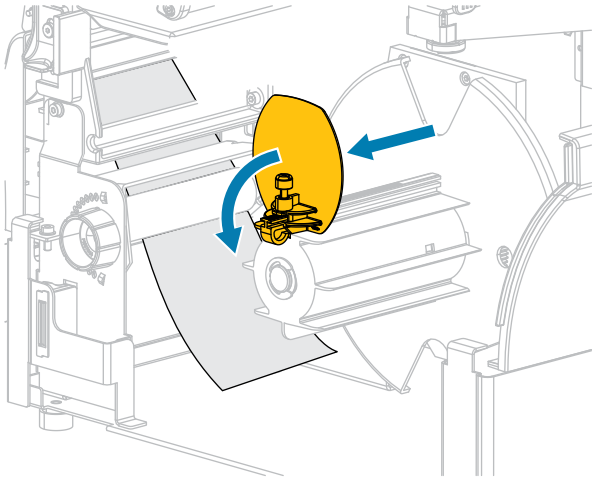

**11.** Slide an empty core onto the rewind spindle.

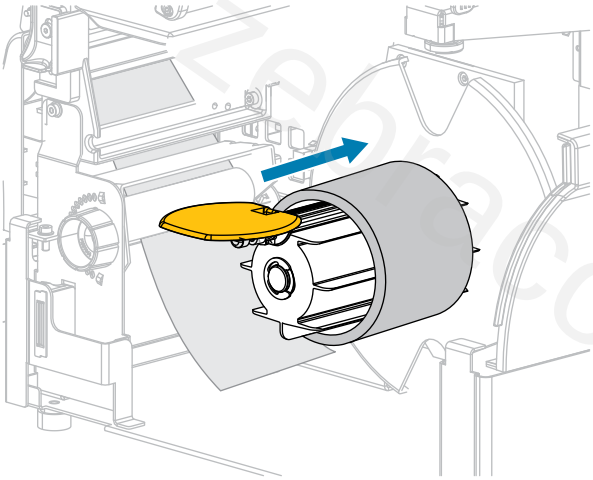

**12.** Wrap the media around the core as shown and turn the rewind spindle to tighten the media. Ensure that the edge of the media is flush against the backplate of the rewind spindle.

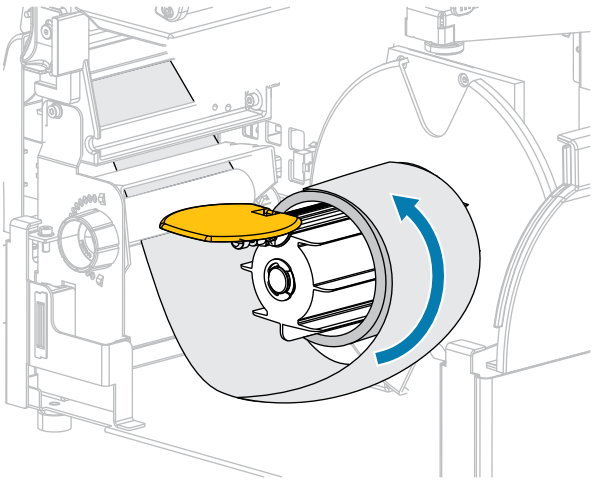



zebracod.ir

**13.** Fold up the rewind media guide, and then slide it in until it touches the media.

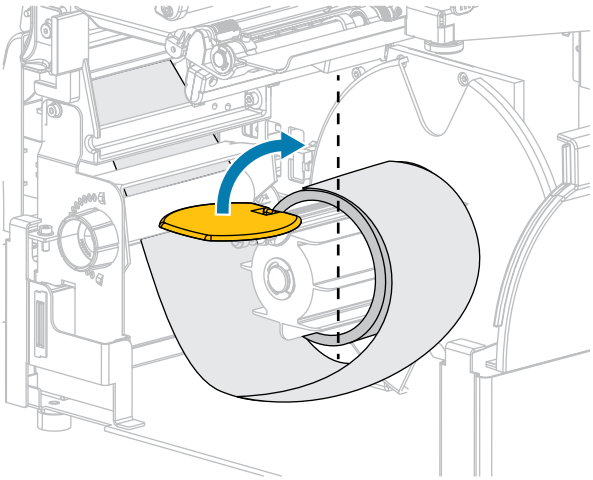

**14.** Tighten the thumbscrew on the rewind media guide.

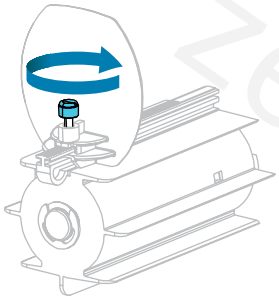

**15.** Slide in the media guide until it just touches the edge of the media.

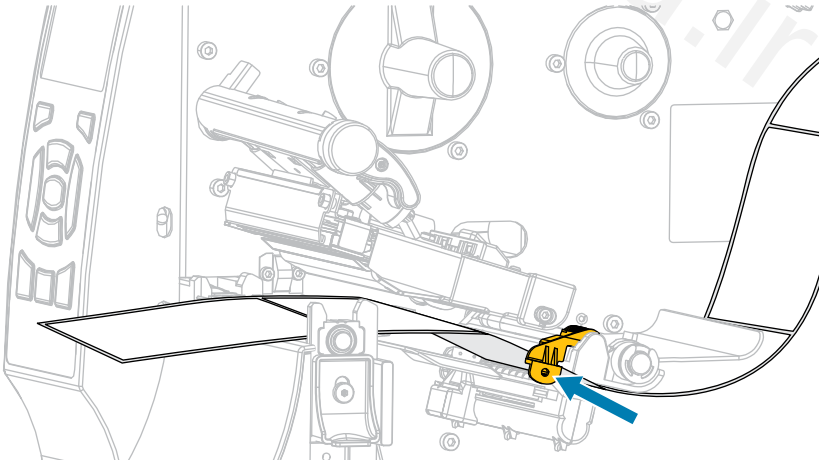

**16.** Does the media that you are using require ribbon for printing? If you are not sure, see Ribbon on page 16.

| If using... | Then... |
|---|---|
| Direct Thermal media (no ribbon needed) | Continue with the next step. |



zebracod.ir

| If using... | Then... |
|---|---|
| Thermal Transfer media (ribbon needed) | If you have not already done so, load ribbon in the printer (see Loading the Ribbon on page 64), then continue with the next step. |

**17.** Rotate the printhead-open lever downward until it locks the printhead in place.

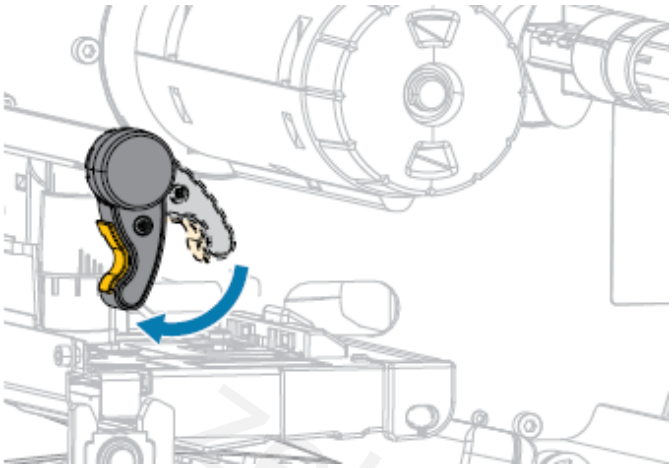

**18.** Close the media door.

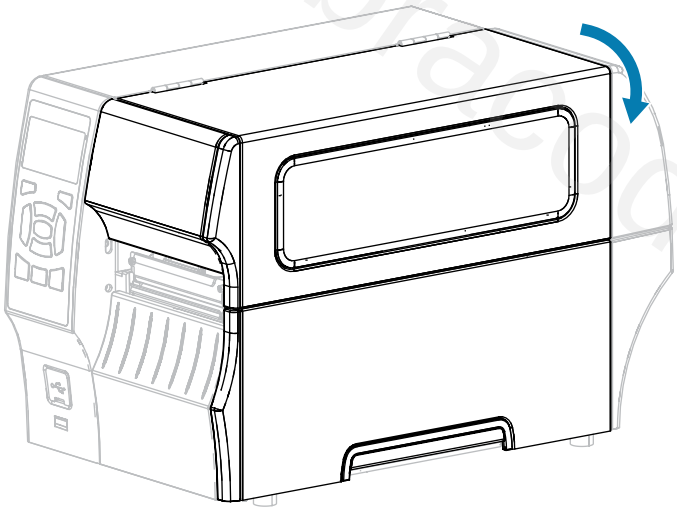

**19.** If you have not already done so, set the printer to REWIND mode. See Selecting a Print Mode on page 34.

**20.** Press **PAUSE** to exit pause mode and enable printing.

The printer may perform a label calibration or feed a label, depending on your settings.

**21.** For optimal results, calibrate the printer. See Calibrating the Ribbon and Media Sensors on page 122.

**22.** Verify that your printer is able to print a configuration label by holding both the **FEED** and **CANCEL** keys for 2 seconds.



zebracod.ir

## Using Cutter Mode or Delayed Cut Mode

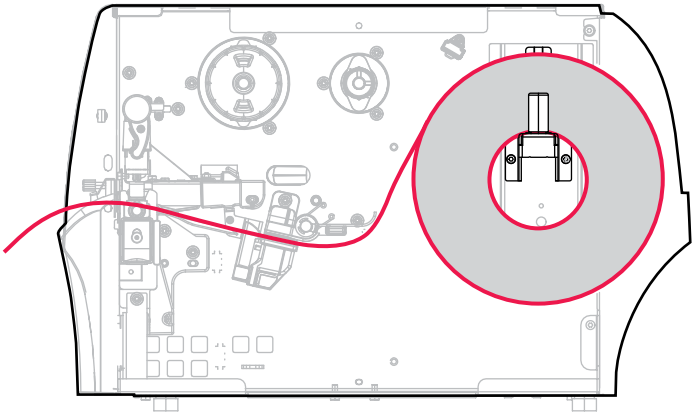

1. If you have not already done so, follow the instructions in Inserting the Media into the Printer on page 36.
2. Open the printhead assembly by rotating the printhead-open lever upward.

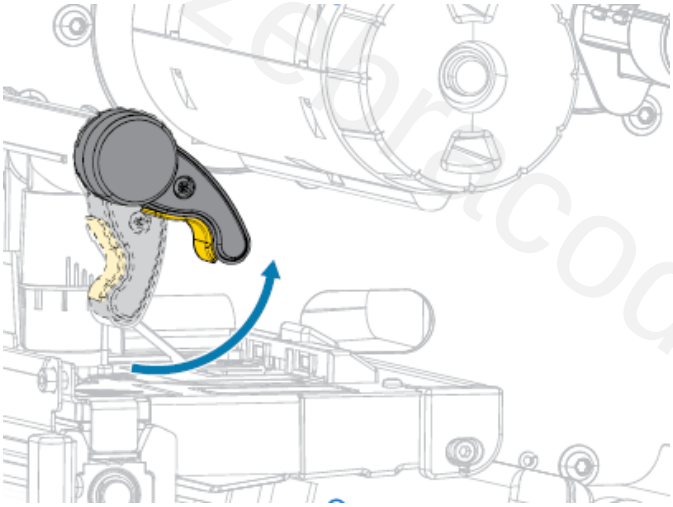



zebracod.ir

**3.** Slide the media guide all the way out.

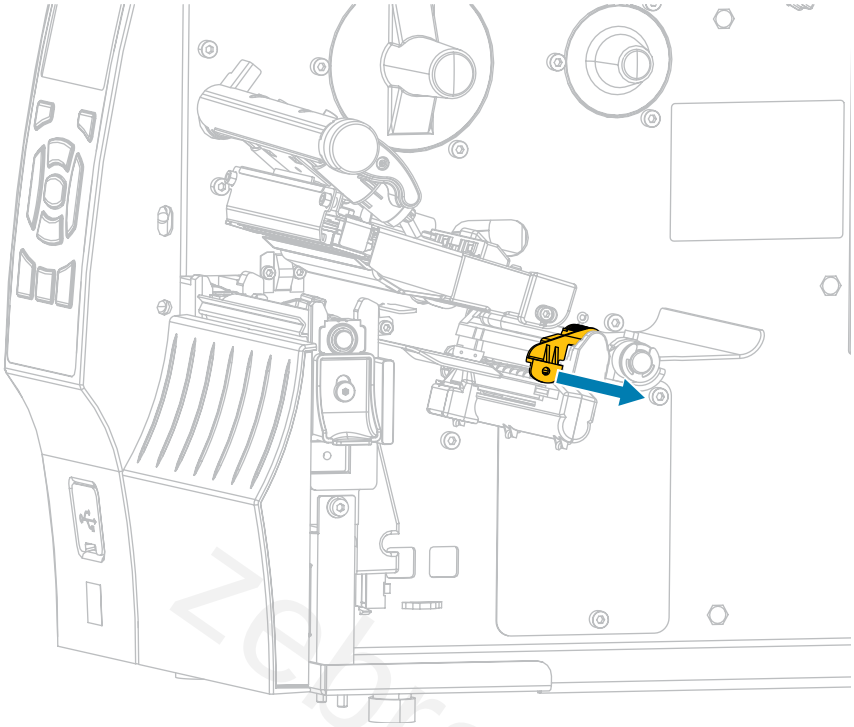

**CAUTION: HOT SURFACE:** The printhead may be hot and could cause severe burns. Allow the printhead to cool.

zebracod.ir



zebracod.ir

4. From the media hanger (1), feed the media under the dancer assembly (2), through the media sensor (3), and under the printhead assembly (4). Slide the media back until it touches the inside back wall of the media sensor.

**CAUTION:** The cutter blade is sharp. Do NOT touch or rub the blade with your fingers.

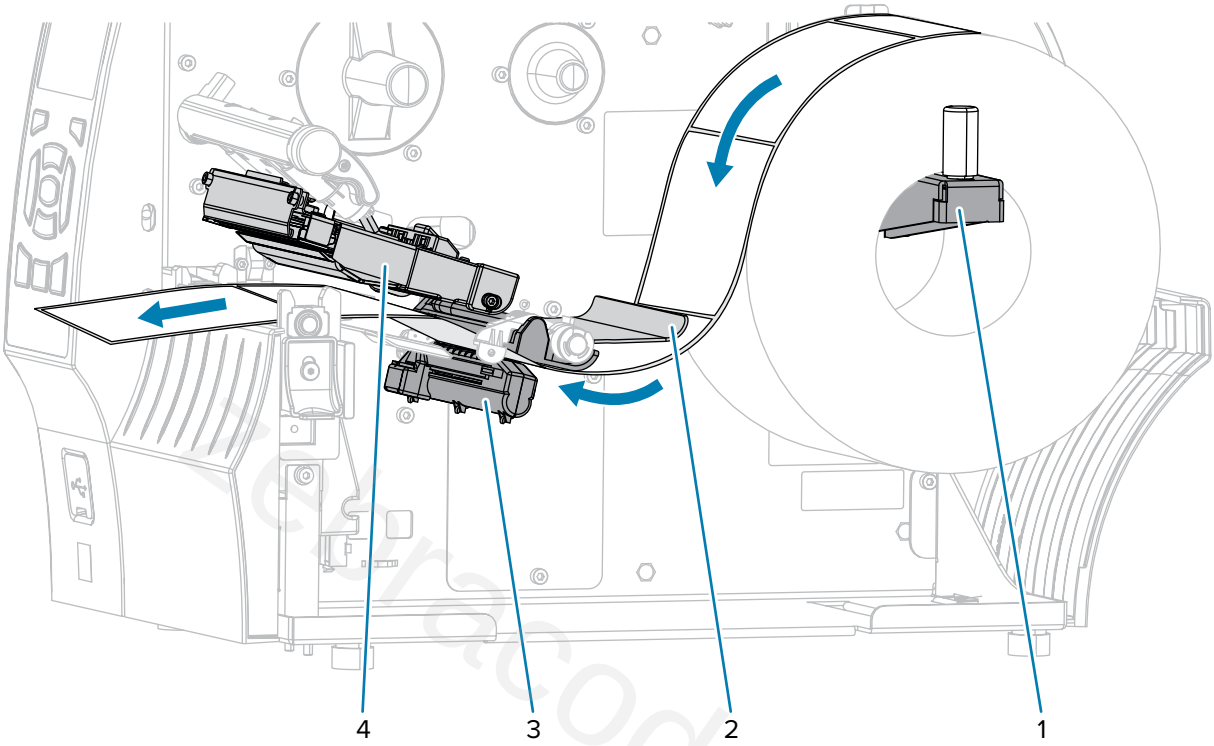




zebracod.ir

**5.** Feed the media through the cutter.

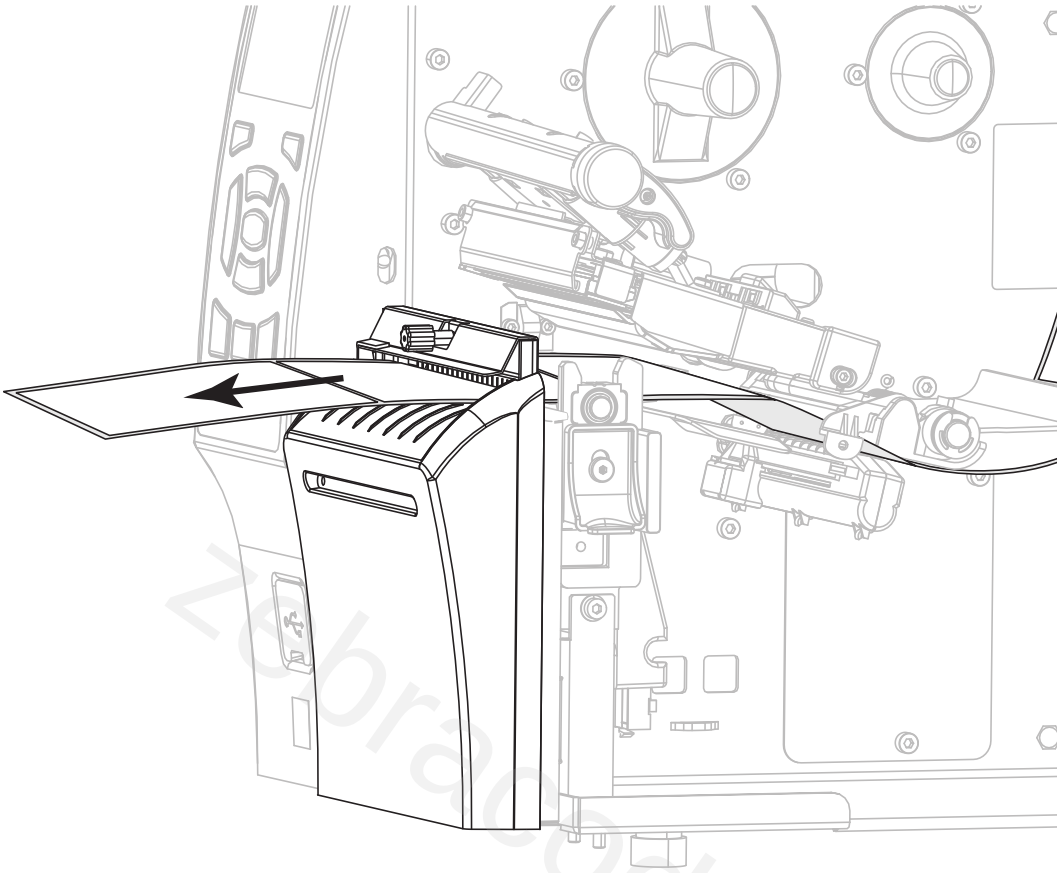

**6.** Slide in the media guide until it just touches the edge of the media.

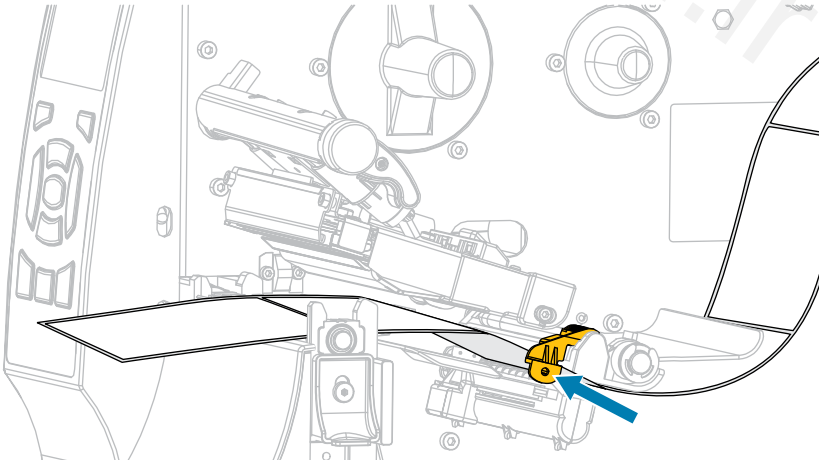

**7.** Does the media that you are using require ribbon for printing? If you are not sure, see Ribbon on page 16.

| If using... | Then... |
|---|---|
| Direct Thermal media (no ribbon needed) | Continue with the next step. |



zebracod.ir

| If using... | Then... |
|---|---|
| Thermal Transfer media (ribbon needed) | If you have not already done so, load ribbon in the printer. (See Loading the Ribbon on page 64.) Then continue with the next step. |

8. Rotate the printhead-open lever downward until it locks the printhead in place.

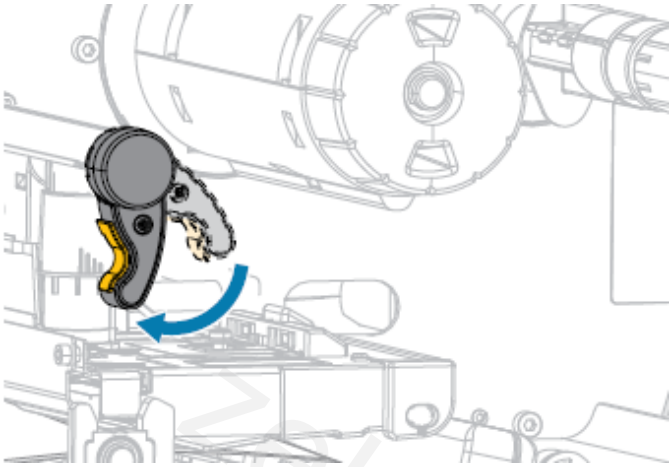

9. Close the media door.

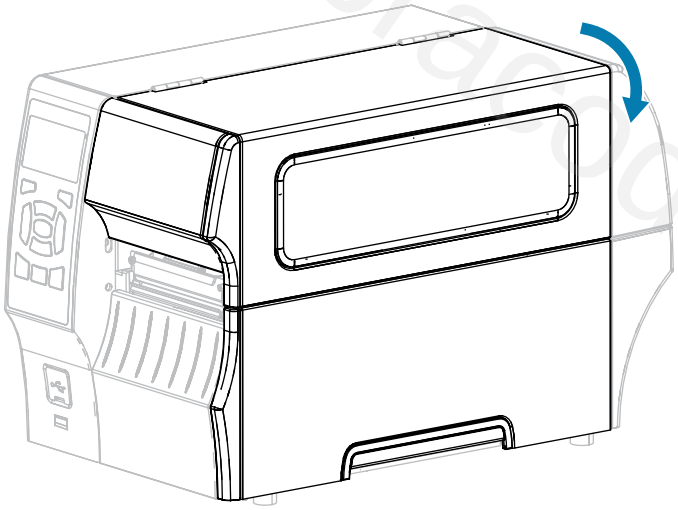

10. If you have not already done so, set the printer to CUTTER mode. See Selecting a Print Mode on page 34.

11. Press **PAUSE** ( ❚❚ ) to exit pause mode and enable printing.

    The printer may perform a label calibration or feed a label, depending on your settings.

12. For optimal results, calibrate the printer. See Calibrating the Ribbon and Media Sensors on page 122.

13. Verify that your printer is able to print a configuration label by holding both the **FEED** and **CANCEL** keys for 2 seconds.



zebracod.ir

# Loading the Ribbon

This section applies only to printers that have the Thermal Transfer option installed. Ribbon is used only with thermal transfer labels. For direct thermal labels, do not load ribbon in the printer.

**IMPORTANT:** You are not required to turn off the printer power when working near an open printhead, but Zebra recommends it as a precaution. If you turn off the power, you will lose all temporary settings, such as label formats, and you must reload them before you resume printing.

Use ribbon that is wider than the media to protect the printhead from wear. Ribbon must be coated on the outside for use in a standard printer. For more information, see 'What Kind of Ribbon Can I Use?' in Ribbon on page 16.

1. Raise the media door.

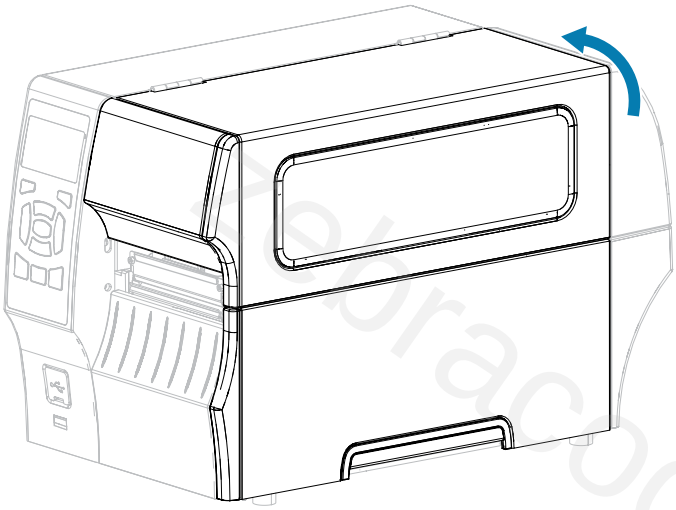

**CAUTION—HOT SURFACE:** The printhead may be hot and could cause severe burns. Allow the printhead to cool.



zebracod.ir

2. Open the printhead assembly by rotating the printhead-open lever.

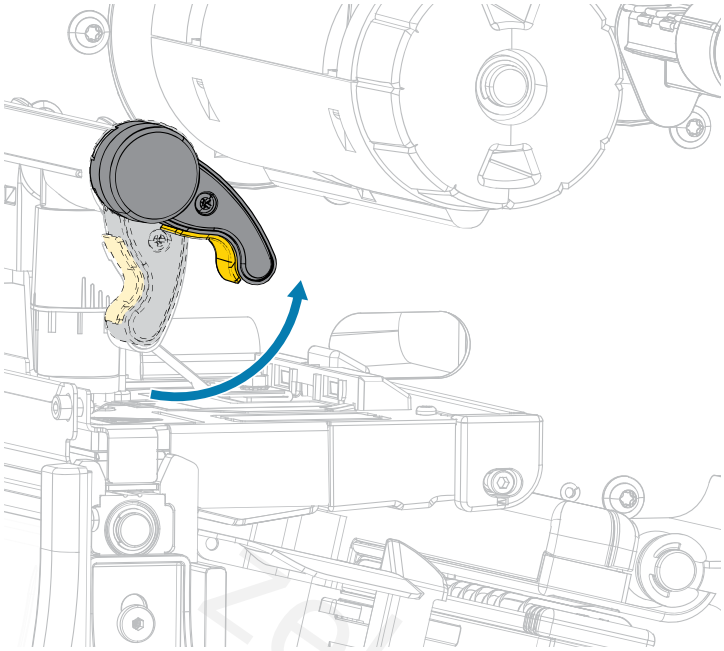

3. Place the roll of ribbon on the ribbon supply spindle with the loose end of the ribbon unrolling as shown. Push the roll back as far as it will go.

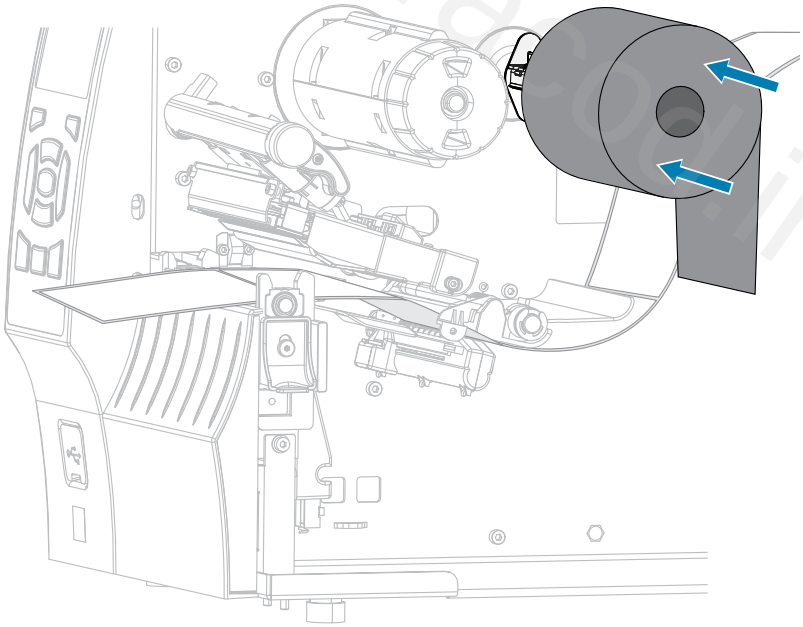



zebracod.ir

4. Bring the ribbon under the printhead assembly and around its left side, as shown.

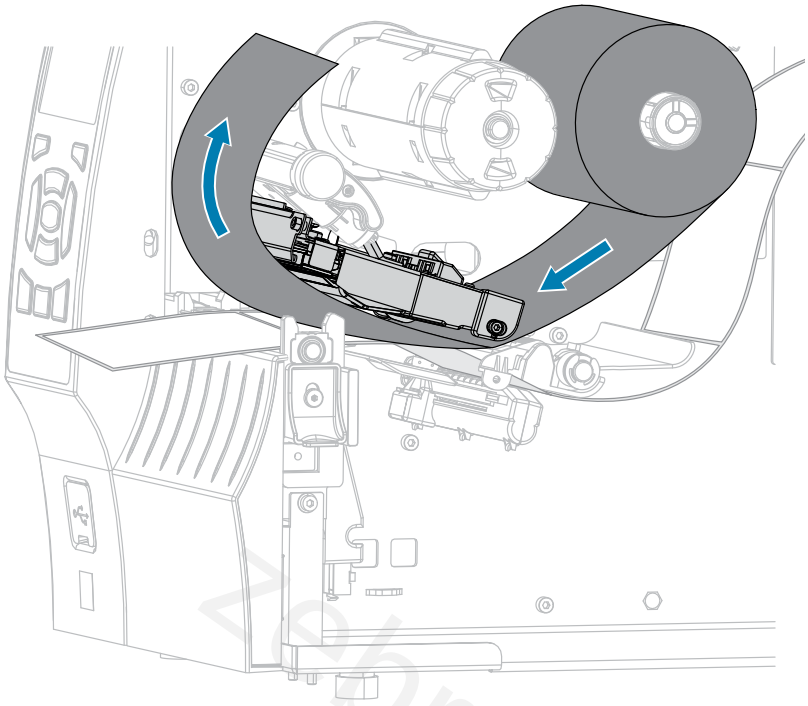

5. With the ribbon tracking as far back as it can under the printhead assembly, wrap the ribbon around the ribbon take-up spindle. Rotate the spindle several turns in the direction shown to tighten and align the ribbon.

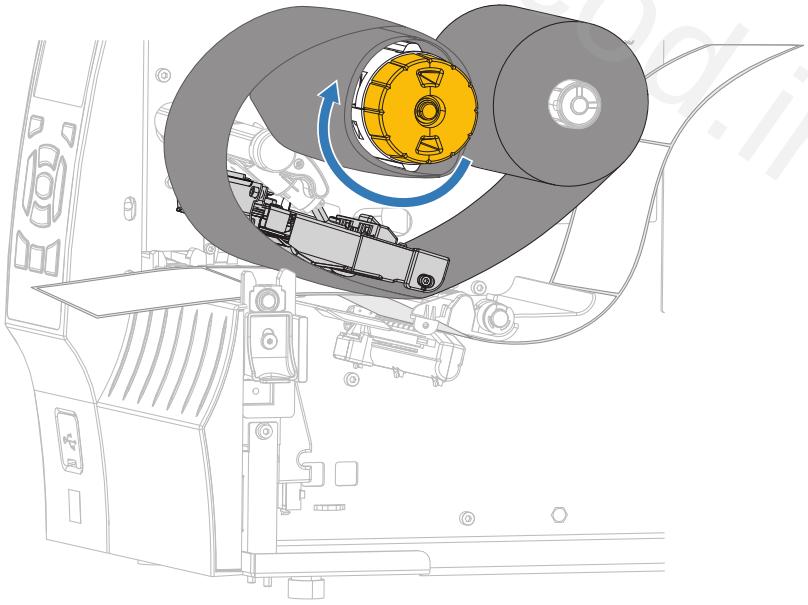

6. Is media already loaded in the printer?

| If... | Then... |
|---|---|
| No | Load media in the printer. (See Loading the Media on page 35.) |



zebracod.ir

| If... | Then... |
|---|---|
| Yes | **a.** Rotate the printhead-open lever downward until it locks the printhead in place.<br> 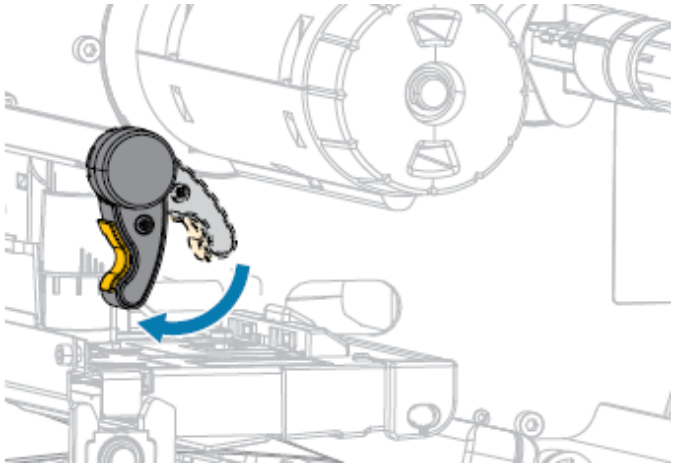 <br>**b.** Close the media door.<br> 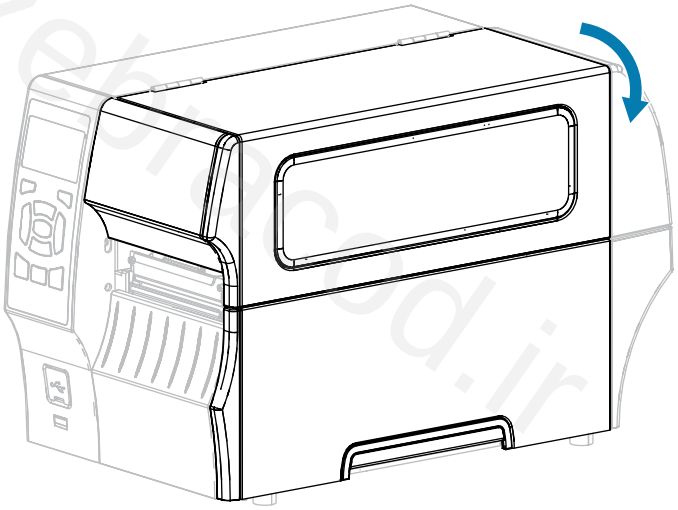 <br>**c.** Press **PAUSE** to exit pause mode and enable printing. |

His completes the ribbon (and media) loading.



zebracod.ir

# Installing Label Design Software

Select and install the software that you will use to create label formats for your printer.

One option is ZebraDesigner, which you can download from zebra.com/zebradesigner. You can choose to use ZebraDesigner Essentials for free or purchase ZebraDesigner Professional for a more robust toolset.

**Figure 4** Sample ZebraDesigner Essentials Screen

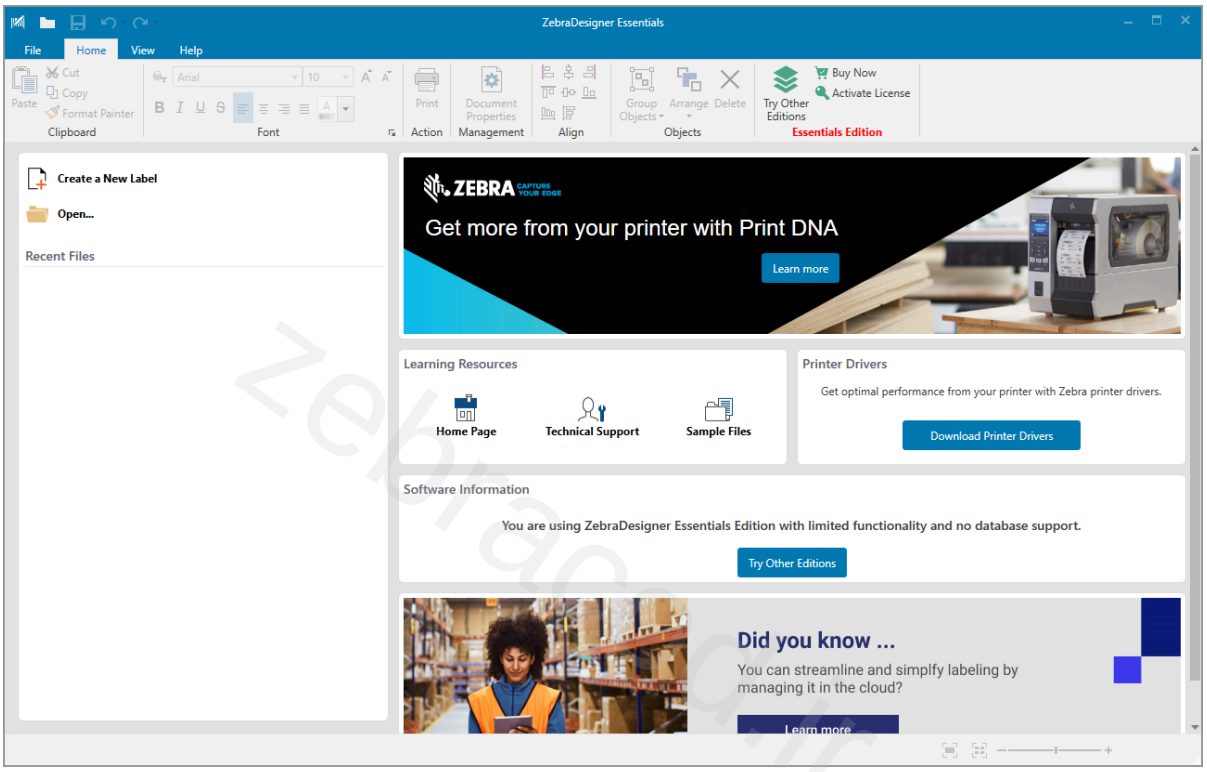


## ZebraDesigner System Requirements

System requirements for the ZebraDesigner label-format design application are listed below:

- 32-bit or 64-bit Windows 10 desktop editions, Windows 11 desktop editions, Windows Server 2016, Windows Server 2019, Windows Server 2022 operating systems.
- CPU: Intel or compatible x86 family processor
- Memory: 2 GB or more RAM
- Hard drive: 1 GB of available disk space
- Microsoft.NET Framework Version 4.7.2
- Display: 1366 × 768 or higher resolution monitor
- ZDesigner printer drivers

**NOTE:** Remote Desktop Services and Virtual Machines are not supported.



zebracod.ir

# Printing a Test Label and Making Adjustments

After you have loaded media, loaded ribbon (if using Thermal Transfer mode), installed the printer driver, and connected your printer to your computer, use the directions in this section to print a test label. Printing this label allows you to see if your connection is working and if you need to adjust any of the printer settings.

1. Turn- printer power off (**O**).
2. Press and hold **CANCEL** while turning on (**I**) the printer. Hold **CANCEL** until the first control panel light turns off.

   The printer prints a printer configuration label and then a network configuration label as shown in these examples.

**Figure 5** Sample Printer Configuration Label

```
PRINTER CONFIGURATION

Zebra Technologies
ZTC ZTXXX-203dpi ZPL
XXXXXX-XX-XXXX

10................ LCD CONTRAST
+10............... DARKNESS
2.0 IPS........... PRINT SPEED
+000.............. TEAR OFF
TEAR OFF.......... PRINT MODE
GAP/NOTCH......... MEDIA TYPE
REFLECTIVE........ SENSOR SELECT
832............... PRINT WIDTH
1422.............. LABEL LENGTH
................. PRINT HEAD ID
39.0IN   988MM.... MAXIMUM LENGTH
NOT CONNECTED..... USB COMM.
BIDIRECTIONAL..... PARALLEL COMM.
RS232............. SERIAL COMM.
2400.............. BAUD
8 BITS............ DATA BITS
NONE.............. PARITY
XON/XOFF.......... HOST HANDSHAKE
NONE.............. PROTOCOL
NORMAL MODE....... COMMUNICATIONS
<~>  7EH.......... CONTROL PREFIX
<^>  5EH.......... FORMAT PREFIX
<,>  2CH.......... DELIMITER CHAR
ZPL II............ ZPL MODE
CALIBRATION....... MEDIA POWER UP
CALIBRATION....... HEAD CLOSE
DEFAULT........... BACKFEED
+000.............. LABEL TOP
+0000............. LEFT POSITION
DISABLED.......... REPRINT MODE
020............... WEB SENSOR
024............... MEDIA SENSOR
255............... TAKE LABEL
027............... MARK SENSOR
027............... MARK MED SENSOR
102............... TRANS GAIN
000............... TRANS BASE
100............... TRANS LED
050............... MARK LED
DPCSWFXM.......... MODES ENABLED
................. MODES DISABLED
 832 8/MM FULL.... RESOLUTION
V72.18.1ZP15107 <-. FIRMWARE
1.3............... XML SCHEMA
6.4.1 255......... HARDWARE ID
NONE.............. OPTION BOARD
12288k.........R: RAM
65536k........E: ONBOARD FLASH
NONE.............. FORMAT CONVERT
FW VERSION........ IDLE DISPLAY
07/20/12.......... RTC DATE
02:37............. RTC TIME
DISABLED.......... ZBI
2.1............... ZBI VERSION
READY............. ZBI STATUS
15.110 IN......... NONRESET CNTR
15.110 IN......... RESET CNTR1
15.110 IN......... RESET CNTR2
38.378 CM......... NONRESET CNTR
38.378 CM......... RESET CNTR1
38.378 CM......... RESET CNTR2
FIRMWARE IN THIS PRINTER IS COPYRIGHTED
```

**Figure 6** Sample Network Configuration Label

```
Network Configuration

Zebra Technologies
ZTC ZT620R-203dpi ZPL
76J162700886

Wired............. PRIMARY NETWORK
PrintServer....... LOAD LAN FROM?
INTERNAL WIRED..... ACTIVE PRINTSRVR

Wired*
ALL............... IP PROTOCOL
192.168.000.017.... IP ADDRESS
255.255.255.000.... SUBNET
192.168.000.254.... GATEWAY
000.000.000.000.... WINS SERVER IP
YES............... TIMEOUT CHECKING
300............... TIMEOUT VALUE
000............... ARP INTERVAL
9100.............. BASE RAW PORT
9200.............. JSON CONFIG PORT

Wireless
ALL............... IP PROTOCOL
000.000.000.000.... IP ADDRESS
255.255.255.000.... SUBNET
000.000.000.000.... GATEWAY
000.000.000.000.... WINS SERVER IP
YES............... TIMEOUT CHECKING
300............... TIMEOUT VALUE
000............... ARP INTERVAL
9100.............. BASE RAW PORT
9200.............. JSON CONFIG PORT
INSERTED.......... CARD INSERTED
02dfH............. CARD MFG ID
9134H............. CARD PRODUCT ID
ac:3f:a4:82:05:9c.. MAC ADDRESS
YES............... DRIVER INSTALLED
INFRASTRUCTURE..... OPERATING MODE
125............... ESSID
1.0............... CURRENT TX RATE
OPEN.............. WEP TYPE
WPA PSK........... WLAN SECURITY
1................. WEP INDEX
000............... POOR SIGNAL
LONG.............. PREAMBLE
NO................ ASSOCIATED
ON................ PULSE ENABLED
15................ PULSE RATE
OFF............... INTL MODE
USA/CANADA........ REGION CODE
USA/CANADA........ COUNTRY CODE
0x7FF............. CHANNEL MASK

Bluetooth
4.3.1p1........... FIRMWARE
02/13/2015........ DATE
on................ DISCOVERABLE
3.0/4.0........... RADIO VERSION
on................ ENABLED
AC:3F:A4:82:05:9D.. MAC ADDRESS
76J162700886...... FRIENDLY NAME
no................ CONNECTED
1................. MIN SECURITY MODE
nc................ CONN SECURITY MODE
supported......... iOS

FIRMWARE IN THIS PRINTER IS COPYRIGHTED
```



zebracod.ir

3. Did the label print, and was it of acceptable print quality?

| If... | Then... |
|---|---|
| The label printed and the print quality is acceptable | Your printer is ready for printing. See Installing Label Design Software on page 68. |
| The label did not print | **a.** Close the **Tools** window and make sure that you selected the correct printer driver before you click **Open Printer Tools**. Try printing the label again.<br>**b.** If the label still did not print, check the connections between the printer and your computer or the printer and your network.<br>**c.** If necessary, modify the printer's settings to make them match the settings of your computer or network. See Network Settings on page 96. |
| The label prints, but with poor quality or other issues | See Printing Issues on page 167 for troubleshooting instructions. |

Zebracod.ir



zebracod.ir

# Printer Configuration and Adjustment

This section assists you with configuration of and adjustments to the printer.

## Changing Printer Settings

This section presents the printer settings that you can change and identifies tools for changing them. These tools include the following:

- The Windows driver installed previously. (See Changing Printer Settings through the Windows Driver on page 71 for more information.)
- The printer's user menus (See Changing Printer Settings through the User Menus on page 73 for more information.)
- Zebra Printer Setup Utilities:
  - Windows computers
  - Android devices
  - Apple devices
- ZPL and Set/Get/Do (SGD) commands (See the Zebra Programming Guide for more information.)
- The printer's web pages when the printer has an active wired or wireless print server connection (See the ZebraNet Wired and Wireless Print Servers User Guide for more information.)

### Changing Printer Settings through the Windows Driver

1. From the **Windows Start Menu**, go to **Printers & Scanners**.
2. Click your printer in the list of available printers, and then click **Manage**.



zebracod.ir

3. Click **Printing Preferences**.

   The ZDesigner window for your printer displays.

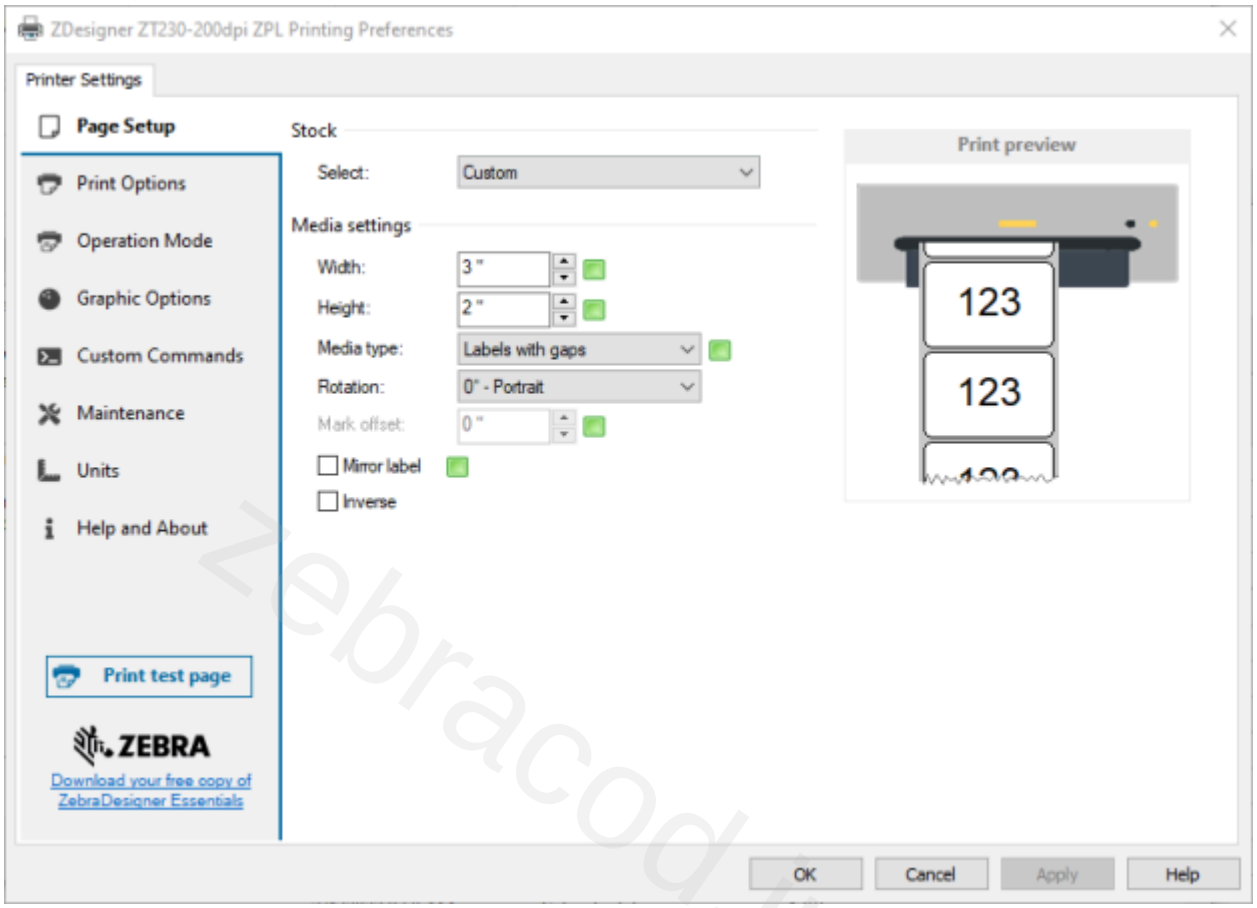


zebracod.ir



zebracod.ir

## Changing Printer Settings through the User Menus

The following are the user menus and the items that appear in each.

**SETTINGS**

- DARKNESS
- PRINT SPEED
- MEDIA TYPE
- PRINT METHOD
- TEAR OFF
- PRINT WIDTH
- PRINT MODE
- LEFT POSITION
- REPRINT MODE
- LABEL LENGTH MAX
- LANGUAGE
- TOOLS MENU*

**TOOLS**

- PRINT INFORMATION
- LCD CONTRAST
- IDLE DISPLAY
- POWER UP ACTION
- HEAD CLOSE ACTION
- HEAD OPEN LIGHT
- COVER OPEN LIGHT
- LOAD DEFAULTS
- MEDIA/RIBBON CAL
- DIAGNOSTIC MODE
- ZBI ENABLED?
- RUN ZBI PROGRAM
- STOP ZBI PROGRAM
- PRINT USB FILE
- COPY USB FILE TO E:
- STORE E: FILE TO USB
- PRINT STATION
- NETWORK MENU*

**NETWORK**

- ACTIVE PRINT SERVER
- PRIMARY NETWORK
- WIRED IP ADDRESS
- WIRED SUBNET MASK
- WIRED GATEWAY
- WIRED IP PROTOCOL
- WIRED MAC ADDRESS
- IP PORT
- IP ALTERNATE PORT
- WLAN IP ADDRESS
- WLAN SUBNET MASK
- WLAN GATEWAY
- WLAN IP PROTOCOL
- WLAN MAC ADDRESS
- ESSID
- CHANNEL
- SIGNAL
- PRINT INFORMATION
- RESET NETWORK
- LOAD DEFAULTS
- RFID MENU*

**RFID**

- RFID COUNTRY CODE
- RFID STATUS
- RFID CALIBRATE
- READ RFID DATA
- RFID TEST
- RFID PROGRAM POS.
- RFID ANTENNA
- RFID READ POWER
- RFID WRITE POWER
- RFID VALID COUNT
- RFID VOID COUNT
- LANGUAGE MENU*

**LANGUAGE**

- LANGUAGE
- COMMAND CHAR
- CONTROL CHAR
- DELIMITER CHAR
- ZPL MODE
- SENSORS MENU*

**SENSORS**

- SENSOR TYPE
- MEDIA/RIBBON CAL
- PRINT INFORMATION
- LABEL SENSOR
- TAKE LABEL
- PORTS MENU*

**PORTS**

- BAUD RATE
- DATA BITS
- PARITY
- HOST HANDSHAKE
- WML
- BLUETOOTH MENU*

**BLUETOOTH**

- BLUETOOTH ADDRESS
- MODE
- DISCOVERY
- CONNECTED
- BT SPEC VERSION
- MIN SECURITY MODE
- SETTINGS MENU*

**NOTE:** The * next to a menu name indicates that the item is a shortcut that takes you to the next user menu.



zebracod.ir

## Settings

**Table 5** SETTINGS Menu

| Setting | Description | |
|---|---|---|
| Print Darkness | Set the darkness to the lowest setting that provides good print quality. If you set the darkness too high, the label image may print unclearly, bar codes may not scan correctly, the ribbon may burn through, or the printhead may wear prematurely.<br>If desired, use Evaluating Barcode Quality on page 151 to determine the optimal darkness setting. | |
| | User menu item: | Main Menu > **SETTINGS**<br>DARKNESS<br>▼ 10.0 ▲ |
| | Accepted values: | 0.0 – 30.0 |
| | Related ZPL command(s): | ^MD, ~SD |
| | SGD command used: | print.tone |
| | Printer web page: | **View and Modify Printer Settings** > **General Setup** > **Darkness** |
| Print Speed | Select the speed for printing a label (given in inches per second). Slower print speeds typically yield better print quality. | |
| | User menu item: | Main Menu > **SETTINGS**<br>PRINT SPEED<br>▼ 0.6 ▲ |
| | Accepted values: | 2, 3, 4, 5, 6 |
| | Related ZPL command(s): | ^PR |



zebracod.ir

**Table 5** SETTINGS Menu (Continued)

| Setting | Description | |
|---|---|---|
| | SGD command used: | media.speed |
| Media Type | Select the type of media that you are using. | |
| | User menu item: | Main Menu > **SETTINGS**<br>MEDIA TYPE<br>▼ GAP/NOTCH ▲ |
| | Accepted values: | • CONTINUOUS<br>• GAP/NOTCH<br>• MARK<br>If you select CONTINUOUS, you must include a label length in your label format (^LL if you are using ZPL). If you select GAP/NOTCH or MARK for various non-continuous media, the printer feeds media to calculate the label length. |
| | Related ZPL command(s): | ^MN |
| | SGD command used: | ezpl.media_type |
| | Printer web page: | **View and Modify Printer Settings** > **Media Setup** > **Media Type** |
| Print Method | Specify if the printer is to use Direct Thermal mode (no ribbon) or Thermal Transfer mode (using thermal transfer media and ribbon). | |



zebracod.ir

**Table 5** SETTINGS Menu (Continued)

| Setting | Description | |
|---|---|---|
| | User menu item: | Main Menu > **SETTINGS**<br>PRINT METHOD<br>▼ THERMAL TRANS ▲ |
| | Accepted values: | • THERMAL TRANS—uses ribbon and thermal transfer media<br>• DIRECT THERMAL—uses direct thermal media and no ribbon |
| | Related ZPL command(s): | ^MT |
| | SGD command used: | ezpl.print_method |
| | Printer web page: | **View and Modify Printer Settings** > **Media Setup** > **Print Method** |
| Tear-Off (position) | If necessary, adjust the position of the media over the tear-off bar after printing. | |
| | User menu item: | Main Menu > **SETTINGS**<br>TEAR OFF<br>▼ 0 ▲ |



zebracod.ir

**Table 5** SETTINGS Menu (Continued)

| Setting | Description | |
|---|---|---|
| | Accepted values: | –120 to 120<br>• Higher numbers move the media out (the tear line moves closer to the leading edge of the next label).<br>• Lower numbers move the media in (the tear line moves closer to the edge of the label just printed).<br> 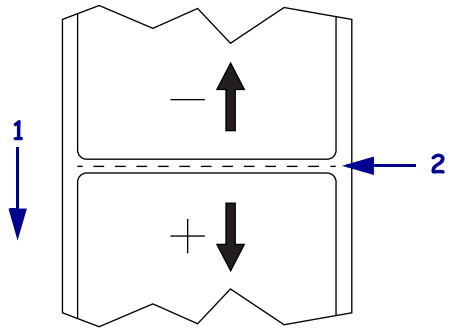 <br><br>1 – Media direction<br>2 – Factory-set tear line location at position 000 |
| | Related ZPL command(s): | ~TA |
| | SGD command used: | ezpl.tear_off |
| | Printer web page: | **View and Modify Printer Settings** > **General Setup** > **Tear Off** |
| Print Width | Specify the width of the labels being used, in dots. The default value is the maximum width for the printer, based on the printhead's DPI value. | |
| | User menu item: | Main Menu > **SETTINGS**<br>PRINT WIDTH<br>▼ 832 ▲ |



zebracod.ir

**Table 5** SETTINGS Menu (Continued)

| Setting | Description | |
|---|---|---|
| | Accepted values: | **NOTE:** Setting the width too narrow can result in portions of a label format not being printed on the media. Setting the width too wide wastes formatting memory and can cause the printer to print off of the label and onto the platen roller. This setting can affect the horizontal position of the label format if the image was inverted using the ^POI ZPL II command.<br>ZT410 203 dpi = 0002 to 832<br>ZT410 300 dpi = 0002 to 1248<br>ZT410 600 dpi = 0002 to 2496<br>ZT420 203 dpi = 0002 to 1344<br>ZT420 300 dpi = 0002 to 1984 |
| | Related ZPL command(s): | ^PW |
| | SGD command used: | ezpl.print_width |
| | Printer web page: | **View and Modify Printer Settings** > **Media Setup** > **Print Width** |
| Print Mode | Select a print mode that is compatible with your printer options.<br>For information about how the print mode selections work with different printer options, see Selecting a Print Mode on page 34. | |
| | User menu item: | Main Menu > **SETTINGS**<br>PRINT MODE<br>▼ TEAR OFF ▲ |
| | Accepted values: | • TEAR OFF<br>• CUTTER<br>• PEEL (use this value for peel-off or liner take-up printing)<br>• REWIND |
| | Related ZPL command(s): | ^MM |



zebracod.ir

**Table 5** SETTINGS Menu (Continued)

| Setting | Description | |
|---|---|---|
| | SGD command used: | media.printmode |
| | Printer web page: | **View and Modify Printer Settings** > **General Setup** > **Print Mode** |
| Left Position (for labels) | If necessary, shift the print position horizontally on the label. Positive numbers move the left edge of the image toward the center of the label by the number of dots selected, while negative numbers move the left edge of the image toward the left edge of the label. | |
| | User menu item: | Main Menu > **SETTINGS**<br>LEFT POSITION<br>▼ 0 ▲ |
| | Accepted values: | –9999 to 9999 |
| | Related ZPL command(s): | ^LS |
| | SGD command used: | zpl.left_position |
| | Printer web page: | **View and Modify Printer Settings** > **Advanced Setup** > **Left Position** |
| Reprint Mode | When reprint mode is enabled, you can reprint the last label printed by pressing **DOWN ARROW** on the printer's control panel. | |
| | User menu item: | Main Menu > **SETTINGS**<br>REPRINT MODE<br>▼ OFF ▲ |
| | Accepted values: | • ON<br>• OFF |



zebracod.ir

**Table 5** SETTINGS Menu (Continued)

| Setting | Description | |
|---|---|---|
| | Related ZPL command(s): | ^JZ |
| | SGD command used: | ezpl.reprint_mode |
| Maximum Label Length | Set the maximum label length. | |
| | User menu item: | Main Menu > **SETTINGS**<br>LABEL LENGTH MAX<br>▼ 39 ▲ |

zebracod.ir



zebracod.ir

**Table 5** SETTINGS Menu (Continued)

| Setting | Description | |
|---|---|---|
| | Accepted values: | 0 to the maximum label length supported by the printer<br><br>**IMPORTANT:** Specify a value that is at least 1.0 in. (25.4 mm) greater than the actual label length plus the interlabel gap. If you set the value to one that is smaller than the label length, the printer assumes that continuous media is loaded, and the printer cannot calibrate.<br><br>For example, if the label length is 6.0 in. (152 mm) including the interlabel gap, set the parameter for at least 7.0 in. (178 mm).<br><br> 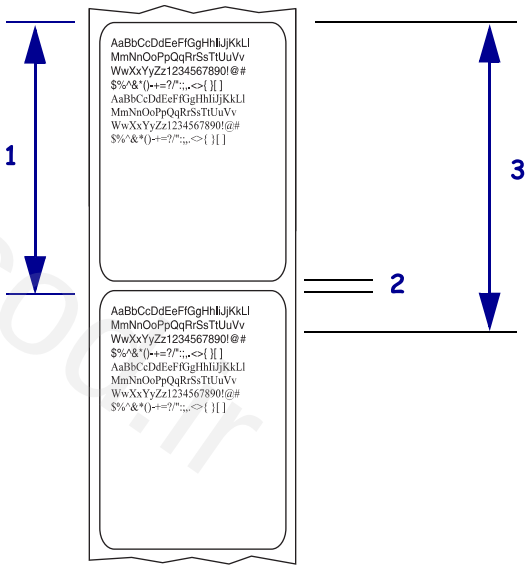 <br><br><br>1 — Label length (including interlabel gap)<br>2 — Interlabel gap<br>3 — Set the maximum label length to approximately this value |
| | Related ZPL command(s): | ^ML |
| | SGD command used: | ezpl.label_length_max |
| | Printer web page: | **View and Modify Printer Settings** > **Media Setup** > **Maximum Length** |



zebracod.ir

## Calibration, Diagnostic, and Other Tools

**Table 6** TOOLS Menu

| Tools Setting | Description | |
|---|---|---|
| Print Information | Print the specified information on one or more labels. | |
| | User menu item: | Main Menu > **TOOLS**<br>PRINT INFORMATION<br>▼ SETTINGS ▲<br>PRINT |
| | | Main Menu > **NETWORK**<br>PRINT INFORMATION<br>▼ NETWORK ▲<br>PRINT |

zebracod.ir



zebracod.ir

**Table 6** TOOLS Menu (Continued)

| Tools Setting | Description | |
|---|---|---|
| | | Main Menu > **SENSORS**<br>PRINT INFORMATION<br>▼ SENSOR PROFILE ▲<br>PRINT |
| | Accepted values: | • SETTINGS—prints the printer configuration label.<br>• NETWORK—prints the settings for any print server that is installed.<br>• FORMATS—prints the available formats stored in the printer's RAM, Flash memory, or optional memory card.<br>• IMAGES—prints the available images stored in the printer's RAM, Flash memory, or optional memory card.<br>• FONTS—prints the available fonts in the printer, including standard printer fonts plus any optional fonts. Fonts may be stored in RAM or Flash memory.<br>• BARCODES—prints the available bar codes in the printer. Bar codes may be stored in RAM or Flash memory.<br>• ALL—prints the previous six labels.<br>• SENSOR PROFILE—shows the sensor settings compared to actual sensor readings. To interpret the results, see Sensor Profile on page 157. |
| | Related ZPL command(s): | SETTINGS: ~WC<br>NETWORK: ~WL<br>SENSOR PROFILE: ~JG<br>Others: ^WD |



zebracod.ir

**Table 6** TOOLS Menu (Continued)

| Tools Setting | Description | |
|---|---|---|
| | Control panel key(s): | SETTINGS and NETWORK: Do one of the following:<br>• Hold **CANCEL** during printer power-up.<br>• Hold **FEED** + **CANCEL** for 2 seconds when the printer is in the Ready state.<br>SENSOR PROFILE: Hold **FEED** + **CANCEL** during printer power-up. |
| | Printer web page: | **View and Modify Printer Settings** > **Print Listings on Label** |
| LCD Contrast | Change the contrast on the printer's display. (Does not display on the color screen option.) | |
| | User menu item: | Main Menu > **TOOLS**<br>LCD CONTRAST<br>▼ 13 ▲ |
| | Accepted values: | 3 to 15 |
| | SGD command used: | display.contrast |
| Idle Display | Select the information shown on the printer's display when the printer is idle. | |

zebracod.ir



zebracod.ir

**Table 6** TOOLS Menu (Continued)

| Tools Setting | Description | |
|---|---|---|
| | User menu item: | Main Menu > **TOOLS**<br>IDLE DISPLAY<br>▼ FW VERSION ▲ |
| | Accepted values: | • FW VERSION<br>• IP ADDRESS<br>• MM/DD/YY 24 HR<br>• MM/DD/YY 12 HR<br>• DD/MM/YY 24 HR<br>• DD/MM/YY 12 HR |
| | SGD command used: | device.idle_display_format |
| Power-Up Action | Set the action for the printer to take during the power-up sequence. | |

Zebracod.ir



zebracod.ir

**Table 6** TOOLS Menu (Continued)

| Tools Setting | Description | |
|---|---|---|
| | User menu item: | Main Menu > **TOOLS**<br>POWER UP ACTION<br>▼ CALIBRATE ▲ |
| | Accepted values: | • CALIBRATE—adjusts sensor levels and thresholds, determines the label length, and feeds the media to the next web.<br>• FEED—feeds the labels to the first registration point.<br>• LENGTH—determines the label length using current sensor values, and feeds the media to the next web.<br>• NO MOTION—tells the printer not to move the media. You must manually ensure that the web is positioned correctly, or press **FEED** to position the next web.<br>• SHORT CAL—sets the media and web thresholds without adjusting sensor gain, determines the label length, and feeds the media to the next web. |
| | Related ZPL command(s): | ^MF |
| | SGD command used: | ezpl.power_up_action |
| | Printer web page: | **View and Modify Printer Settings** > **Calibration** |

Zebracod.ir



zebracod.ir

**Table 6** TOOLS Menu (Continued)

| Tools Setting | Description | |
|---|---|---|
| Head-Close Action | Set the action for the printer to take when you close the printhead. | |
| | User menu item: | Main Menu > **TOOLS**<br>HEAD CLOSE ACTION<br>▼ CALIBRATE ▲ |
| | Accepted values: | • CALIBRATE—adjusts sensor levels and thresholds, determines the label length, and feeds the media to the next web.<br>• FEED—feeds the labels to the first registration point.<br>• LENGTH—determines the label length using current sensor values, and feeds the media to the next web.<br>• NO MOTION—tells the printer not to move the media. You must manually ensure that the web is positioned correctly, or press **FEED** to position the next web.<br>• SHORT CAL—sets the media and web thresholds without adjusting sensor gain, determines the label length, and feeds the media to the next web. |
| | Related ZPL command(s): | ^MF |
| | SGD command used: | ezpl.head_close_action |
| | Printer web page: | **View and Modify Printer Settings** > **Calibration** |
| Head-Open Light | Set the brightness of the light that turns on when the printhead is open. | |



zebracod.ir

**Table 6** TOOLS Menu (Continued)

| Tools Setting | Description | |
|---|---|---|
| | User menu item: | Main Menu > **TOOLS**<br>HEAD OPEN LIGHT<br>HIGH |
| | Accepted values: | • HIGH<br>• MEDIUM<br>• LOW<br>• OFF |
| | SGD command used: | device.light.head_open_brightness |
| Cover-Open Light | Set the brightness of the light that turns on when the media door is open. | |
| | User menu item: | Main Menu > **TOOLS** |
| | Accepted values: | COVER OPEN LIGHT<br>HIGH<br>• HIGH<br>• MEDIUM<br>• LOW<br>• OFF |
| | SGD command used: | device.light.cover_open_brightness |
| Load Defaults | Restore specific printer, print server, and network settings back to the factory defaults. Use care when loading defaults because you will need to reload all settings that you changed manually. | |



zebracod.ir

**Table 6** TOOLS Menu (Continued)

| Tools Setting | Description | |
|---|---|---|
| | User menu item: | Main Menu > **TOOLS**<br>LOAD DEFAULTS<br>▼ FACTORY ▲<br>LOAD<br><br>Main Menu > **TOOLS**<br>LOAD DEFAULTS<br>▼ NETWORK ▲<br>LOAD |
| | Accepted values: | • FACTORY—Restores all printer settings other than the network settings back to the factory defaults. Use care when loading defaults because you will need to reload all settings that you changed manually.<br>• NETWORK—Reinitializes the printer's wired or wireless print server. With a wireless print server, the printer also re-associates with your wireless network.<br>• LAST SAVED—Loads settings from the last permanent save. |
| | Related ZPL command(s): | FACTORY: ^JUF<br>NETWORK: ^JUN<br>LAST SAVED: ^JUR |



zebracod.ir

**Table 6** TOOLS Menu (Continued)

| Tools Setting | Description | |
|---|---|---|
| | Control panel key(s): | FACTORY: Hold **FEED** + **PAUSE** during printer power-up to reset the printer parameters to factory values.<br>NETWORK: Hold **CANCEL** + **PAUSE** during printer power-up to reset the network parameters to factory values.<br>LAST SAVED: N/A |
| | Printer web page: | FACTORY:**View and Modify Printer Settings** > **Restore Default Configuration**<br>NETWORK: **Print Server Settings** > **Reset Print Server**<br>LAST SAVED: **View and Modify Printer Settings** > **Restore Saved Configuration** |
| Media and Ribbon Sensor Calibration | Calibrate the printer to adjust the sensitivity of the media and ribbon sensors.<br>For complete instructions on how to perform a calibration procedure, see Calibrating the Ribbon and Media Sensors on page 122. | |
| | User menu item: | Main Menu > **TOOLS**<br>Main Menu > **SENSORS**<br>MEDIA/RIBBON CAL<br>START |
| | Related ZPL command(s): | ~JC |
| | SGD command used: | ezpl.manual_calibration |
| | Control panel key(s): | Hold **PAUSE** + **CANCEL** for 2 seconds to initiate calibration. |
| | Printer web page: | The calibration procedure cannot be initiated through the web pages. See the following web page for settings that are set during sensor calibration:<br>**View and Modify Printer Settings** > **Calibration**<br>**IMPORTANT:**<br>Do NOT change these settings unless you are told to do so by Zebra Technical Support or by an authorized service technician. |



zebracod.ir

**Table 6** TOOLS Menu (Continued)

| Tools Setting | Description | |
|---|---|---|
| Communication Diagnostics Mode | Use this diagnostics tool to cause the printer to output the hexadecimal values for all data received by the printer.<br>For more information, see Performing a Communication Diagnostic Test on page 159. | |
| | User menu item: | Main Menu > **TOOLS**<br>DIAGNOSTIC MODE<br>▼ DISABLED ▲ |
| | Accepted values: | • DISABLED<br>• ENABLED |
| | Related ZPL command(s): | ~JD to enable, ~JE to disable |
| | SGD command used: | device.diagnostic_print |
| | Control panel key(s): | Hold **PAUSE** + **FEED** for 2 seconds when the printer is in the Ready state. |
| Enable ZBI | Zebra Basic Interpreter (ZBI 2.0) is a programming option that may be purchased for your printer. If you would like to purchase this option, contact your Zebra reseller for more information. | |
| | User menu item: | Main Menu > **TOOLS**<br>ZBI ENABLED?<br>NO |
| | SGD command used: | zbi.key (identifies if the ZBI 2.0 option is enabled or disabled on the printer) |



zebracod.ir

**Table 6** TOOLS Menu (Continued)

| Tools Setting | Description | |
|---|---|---|
| Run a ZBI Program | If you have ZBI installed, you may choose to run a ZBI program that you have downloaded to your printer. | |
| | User menu item: *<br>* This menu item appears only if ZBI is enabled on your printer and no ZBI program is running. | Main Menu > **TOOLS**<br>RUN ZBI PROGRAM<br>▼ E:DIVIDE.BAS ▲<br>RUN<br>If ZBI programs exist on your printer, they are listed. If no program exists, NONE is listed.<br>If you wish to run a ZBI program that you have downloaded to your printer:<br>Use the **UP ARROW** or **DOWN ARROW** to select a file from this menu. Press **RIGHT SELECT** to select RUN. If no program exists, the RUN option does not perform an action. |
| | Related ZPL command(s): | ^JI, ~JI |
| | SGD command used: | zbi.control.run |
| | Printer web page: | Directory Listing |
| Stop a ZBI Program | If your printer is running a ZBI program, you may stop that program. | |
| | User menu item: *<br>* This menu item appears only if ZBI is enabled on your printer and no ZBI program is running. | Main Menu > **TOOLS**<br>STOP ZBI PROGRAM<br>STOP<br>If ZBI programs are running, the printer lists them.<br>If you wish to stop a program:<br>Use the **UP ARROW** or **DOWN ARROW** to select the file from this menu. Press **RIGHT SELECT** to select STOP. |



zebracod.ir

**Table 6** TOOLS Menu (Continued)

| Tools Setting | Description | |
|---|---|---|
| | Related ZPL command(s): | ~JQ |
| | SGD command used: | zbi.control.terminate |
| | Printer web page: | Directory Listing |
| Print from a USB Flash Drive | Select files to print from a USB Flash drive. | |
| | User menu item: *<br>* This menu item appears only if a USB Flash drive is inserted into the USB host port on the printer. | Main Menu > **TOOLS**<br> <br><br>**1.** Insert a USB flash drive into the printer's USB host port. The printer lists available files. SELECT ALL is available to print all available files on the USB Flash drive.<br>**2.** Use the **UP ARROW** or **DOWN ARROW** to select a file from this menu.<br>**3.** Press **RIGHT SELECT** to select PRINT. |
| | SGD command used: | usb.host.read_list |



zebracod.ir

**Table 6** TOOLS Menu (Continued)

| Tools Setting | Description | |
|---|---|---|
| Copy Files from a USB Flash Drive | Select files to copy to the printer from a USB Flash drive. | |
| | User menu item: *<br>* This menu item appears only if a USB Flash drive is inserted into the USB host port on the printer. | Main Menu > **TOOLS**<br>COPY USB FILE TO E:<br>▼ SELECT ALL ▲<br>STORE<br>**1.** Insert a USB flash drive into the printer's USB host port. The printer lists available files. SELECT ALL is available to copy all available files on the USB flash drive.<br>**2.** Use the **UP ARROW** or **DOWN ARROW** to select a file from this menu.<br>**3.** Press **RIGHT SELECT** to select STORE. |
| | SGD command used: | usb.host.read_list |

zebracod.ir



zebracod.ir

**Table 6** TOOLS Menu (Continued)

| Tools Setting | Description | |
|---|---|---|
| Store Files on a USB Flash Drive | Select files from the printer to store on a USB flash drive. | |
| | User menu item: *<br>* This menu item appears only if a USB Flash drive is inserted into the USB host port on the printer. | Main Menu > **TOOLS**<br>COPY USB FILE TO E:<br>▼ SELECT ALL ▲<br>STORE<br>**1.** Insert a USB flash drive into the printer's USB host port. The printer lists available files. SELECT ALL is available to copy all available files on the USB Flash drive.<br>**2.** Use the **UP ARROW** or **DOWN ARROW** to select a file from this menu.<br>**3.** Press **RIGHT SELECT** to select STORE. |
| | SGD command used: | usb.host.read_list |
| Print Station (Fill in a Form or Print a Label Format from the Display) | Use this menu item to fill in variable fields in a label format and print the label using a Human Input Device (HID), such as a USB keyboard or barcode scanner. A suitable label format must be stored on the E: drive of the printer to use this option.<br>When the printer finds an HID plugged into the printer's USB host port, it uses this user menu to prompt you to select a form on the printer's E: drive. After you have been prompted to fill in each variable ^FN field on the form, you can specify the desired quantity of labels to print.<br>For more information about using the ^FN command or the SGD commands related to this feature, refer to the Zebra Programming Guide. You can download a copy of the manual from zebra.com/manuals. | |



zebracod.ir

**Table 6** TOOLS Menu (Continued)

| Tools Setting | Description | |
|---|---|---|
| | User menu item: *<br>* This menu item appears only if a USB Flash drive is inserted into the USB host port on the printer. | Main Menu > **TOOLS**<br>PRINT STATION<br>SELECT FORM<br>▼ KEYBOARDINPUT.ZPL ▲<br>SELECT<br>**1.** Insert a USB flash drive into the printer's USB host port. The printer lists available files.<br>**2.** Use the **UP ARROW** or **DOWN ARROW** to select a file from this menu.<br>**3.** Press **RIGHT SELECT** to select **SELECT**. The printer accesses the file and prompts for the information in the ^FN fields in the file.<br>**4.** Use your keyboard or barcode scanner to enter the requested information. When using a keyboard, press **<ENTER>** after entering the appropriate information in the field. When all ^FN fields have been filled, the printer prompts for the number of labels to print.<br>**5.** Specify the desired number of labels. The specified number of labels is printed with your data in the appropriate fields. |
| | SGD command used: | usb.host.keyboard_input (must be set to ON)<br>usb.host.template_list usb.host.fn_field_list<br>usb.host.fn_field_data<br>usb.host.fn_last_field<br>usb.host.template_print_amount |

## Network Settings

**Table 7** NETWORK Menu

| Network Setting | Description |
|---|---|
| Active Print Server | Only one print server (wired or wireless) can be installed at a time. Therefore, the print server installed is the active print server. |



zebracod.ir

**Table 7** NETWORK Menu (Continued)

| Network Setting | Description | |
|---|---|---|
| | User menu item: *<br>* This menu item cannot be modified from the control panel. | Main Menu > **NETWORK**<br>ACTIVE PRINT SERVER<br>WIRED |
| Primary Print Server | Only one network (wired or wireless) can be connected to at any given time. Therefore, the network configured is the primary network. | |
| | User menu item: *<br>* This menu item cannot be modified from the control panel. | Main Menu > **NETWORK**<br>PRIMARY NETWORK<br>WIRED |
| Primary TCP/IP Port | View the Ethernet TCP port number, over which labels and commands can be sent for processing. | |
| | User menu item: *<br>* This menu item cannot be modified from the control panel. | Main Menu > **NETWORK**<br>IP PORT<br>6101 |



zebracod.ir

**Table 7** NETWORK Menu (Continued)

| Network Setting | Description | |
|---|---|---|
| Alternate TCP/IP Port | View the alternate Ethernet TCP port number, over which labels and commands can be sent for processing. | |
| | User menu item: *<br>* This menu item cannot be modified from the control panel. | Main Menu > **NETWORK**<br>IP ALTERNATE PORT<br>9100 |
| IP Address | View and, if necessary, change the printer's IP address.<br>To save changes to this setting, set IP Address (listed in this table) to PERMANENT, and then reset the print server. See Reset Network in this table. | |
| | User menu item: | Main Menu > **NETWORK**<br>WIRED IP ADDRESS<br>▼ 000.000.000.000 ▲<br>NEXT<br><br>WLAN IP ADDRESS<br>▼ 172.030.016.102 ▲<br>NEXT |
| | Accepted values: | 000 to 255 for each field |



zebracod.ir

**Table 7** NETWORK Menu (Continued)

| Network Setting | Description | |
|---|---|---|
| | Related ZPL command(s): | ^ND |
| | SGD command used: | Wired: `internal_wired.ip.addr`<br>Wireless: `ip.addr, wlan.ip.addr` |
| | Printer web page: | **View and Modify Printer Settings** > **Network Communications Setup** > **TCP/IP Settings** |
| Subnet Mask | View and, if necessary, change the subnet mask.<br>To save changes to this setting, set IP Protocol (listed in this table) to PERMANENT, and then reset the print server. See Reset Network (listed in this table). | |
| | User menu item: | Main Menu > **NETWORK**<br> 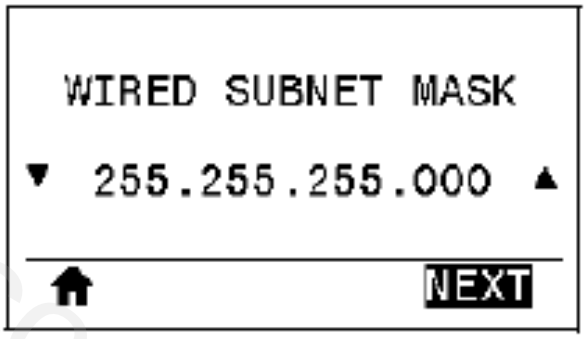 <br> 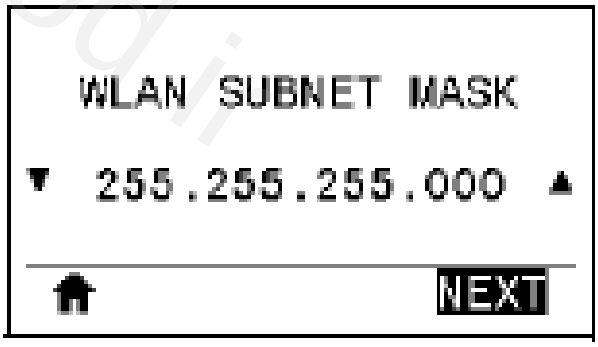 |
| | Accepted values: | 000 to 255 for each field |
| | Related ZPL command(s): | ^ND |
| | SGD command used: | Wired: `internal_wired.ip.netmask`<br>Wireless: `wlan.ip.netmask` |
| | Printer web page: | **View and Modify Printer Settings** > **Network Communications Setup** > **TCP/IP Settings** |
| Gateway | View and, if necessary, change the default gateway.<br>To save changes to this setting, set IP Protocol (listed in this table) to PERMANENT, and then reset the print server. See Reset Network (listed in this table). | |



zebracod.ir

**Table 7** NETWORK Menu (Continued)

| Network Setting | Description | |
|---|---|---|
| | User menu item: | Main Menu > **NETWORK**<br>WIRED GATEWAY<br>172.030.001.001<br>NEXT<br>WLAN GATEWAY<br>172.030.016.001<br>NEXT |
| | Accepted values: | 000 to 255 for each field |
| | Related ZPL command(s): | ^ND |
| | SGD command used: | Wired: `internal_wired.ip.gateway`<br>Wireless: `wlan.ip.gateway` |
| | Printer web page: | **View and Modify Printer Settings** > **Network Communications Setup** > **TCP/IP Settings** |
| IP Protocol | This parameter tells if the user (permanent) or the server (dynamic) selects the IP address. When a dynamic option is chosen, this parameter tells the method(s) by which the wired or wireless print server receives the IP address from the server. | |



zebracod.ir

**Table 7** NETWORK Menu (Continued)

| Network Setting | Description | |
|---|---|---|
| | User menu item: | ain Menu > **NETWORK**<br>WIRED IP PROTOCOL<br>ALL<br>WLAN IP PROTOCOL<br>ALL |
| | Accepted values: | • ALL<br>• GLEANING ONLY<br>• RARP<br>• BOOTP<br>• DHCP<br>• DHCP & BOOTP<br>• PERMANENT |
| | Related ZPL command(s): | ^ND |
| | SGD command used: | Wired: `internal_wired.ip.protocol`<br>Wireless: `wlan.ip.protocol` |
| | Printer web page: | **View and Modify Printer Settings** > **Network Communications Setup** > **TCP/IP Settings** |
| MAC Address | View the Media Access Control (MAC) address of the print server that is installed in the printer (wired or wireless). | |



zebracod.ir

**Table 7** NETWORK Menu (Continued)

| Network Setting | Description | |
|---|---|---|
| | User menu item: | Main Menu > **NETWORK**<br>WIRED MAC ADDRESS<br>00:07:4D:36:96:B9<br>WLAN MAC ADDRESS<br>AC:3F:A4:08:3C:00 |
| | SGD command used: | Wired: `internal_wired.mac_addr`<br>Wireless: `wlan.mac_addr` |
| | Printer web page: | **View and Modify Printer Settings** > **Network Communications Setup** > **Wireless Setup** |
| ESSID | The Extended Service Set Identification (ESSID) is an identifier for your wireless network. This setting, which cannot be modified from the control panel, gives the ESSID for the current wireless configuration. | |
| | User menu item: | Main Menu > **NETWORK**<br>ESSID<br>125 |



zebracod.ir

**Table 7** NETWORK Menu (Continued)

| Network Setting | Description | |
|---|---|---|
| | Accepted values: | 32-character alphanumeric string (default 125) |
| | SGD command used: | `wlan.essid` |
| | Printer web page: | **View and Modify Printer Settings** > **Network Communications Setup** > **Wireless Setup** |
| Channel | View the wireless channel being used when the wireless network is active and authenticated. | |
| | User menu item: | Main Menu > **NETWORK**<br>CHANNEL<br>1 |
| | SGD command used: | `wlan.channel` |
| | Printer web page: | **View and Modify Printer Settings** > **Network Communications Setup** > **Wireless Setup** |
| Signal | View the wireless signal strength when the wireless network is active and authenticated. | |
| | User menu item: | Main Menu > **NETWORK**<br>SIGNAL<br>100 |
| | SGD command used: | `wlan.signal_strength` |
| | Printer web page: | **View and Modify Printer Settings** > **Network Communications Setup** > **Wireless Setup** |



zebracod.ir

**Table 7** NETWORK Menu (Continued)

| Network Setting | Description | |
|---|---|---|
| Reset Network | This option resets the wired or wireless print server. You must reset the print server to allow any changes to the network settings to take effect. | |
| | User menu item: | Main Menu > **NETWORK**<br>RESET NETWORK<br>RESET |
| | Related ZPL command(s): | ~WR |
| | SGD command used: | `device.reset` |
| | Printer web page: | **Print Server Settings** > **Factory Print Server Settings** |

## RFID Settings

**Table 8** RFID Menu

| RFID Setting | Description | |
|---|---|---|
| RFID Country Code | View the RFID country code.<br>**NOTE:** A prompt for the country code appears only on some printers the first time that they are powered up, depending on the world region to which the printers were shipped. Select the appropriate country to access the printer's RFID features. | |
| | User menu item: | Main Menu > **RFID**<br>RFID COUNTRY CODE<br>NOT SELECTED<br>SET |



zebracod.ir

**Table 8** RFID Menu (Continued)

| RFID Setting | Description | |
|---|---|---|
| | SGD command used: | rfid.country_code |
| RFID Status | Display the status of the RFID subsystem of the printer. | |
| | User menu item: | Main Menu > **RFID**<br>RFID STATUS<br>RFID OK |
| | Related ZPL command(s): | ^HL or ~HL |
| | SGD command used: | rfid.error.response |
| RFID Tag Calibration | Initiate tag calibration for RFID media. (Not the same as media and ribbon calibration.) | |
| | User menu item: | Main Menu > **RFID**<br>RFID CALIBRATE<br>START |
| | Related ZPL command(s): | ^HR |
| | SGD command used: | rfid.tag.calibrate |
| Read RFID Data | Read and return the specified tag data from the RFID tag located over the RFID antenna. No printer movement occurs while tag data is being read. The printhead can be open or closed. | |



zebracod.ir

**Table 8** RFID Menu (Continued)

| RFID Setting | Description | |
|---|---|---|
| | User menu item: | Main Menu > **RFID**<br>READ RFID DATA<br>EPC<br>12345ABC12345ABC1234<br>5ABC<br>READ<br>To read and display the information stored on an RFID tag:<br>**1.** Position the RFID label with its transponder over the RFID antenna.<br>**2.** Use the **UP ARROW** or **DOWN ARROW** to select the type of information that you want read and displayed.<br>**3.** Press **RIGHT SELECT** to select READ. The results of the test are shown on the display. |
| | Accepted values: | • epc—reads the first 128 bits of EPC data<br>• tid information—reads the first 32 bits of the TID (Tag ID)<br>• password status—reads the tag's access and kill passwords<br>• protocol bits—reads the protocol bits from the EPC memory banks and converts that value to the EPC size.<br>• memory bank sizes—reads the EPC, TID and user memory banks sizes |
| | Related ZPL command(s): | ^RF |
| | SGD command used: | rfid.tag.read.content and rfid.tag.read.execute |
| RFID Test | During the RFID test, the printer attempts to read and write to a transponder. No printer movement occurs with this test. | |



zebracod.ir

**Table 8** RFID Menu (Continued)

| RFID Setting | Description | |
|---|---|---|
| | User menu item:<br>* This menu item appears only if a wired or wireless print server is installed in your printer. | Main Menu > **RFID**<br>RFID TEST<br>START<br>To test an RFID label:<br>**1.** Position the RFID label with its transponder over the RFID antenna array.<br>**2.** Press **RIGHT SELECT** to select START. The results of the test are shown on the display. |
| | Accepted values: | • quick—performs a read EPC test and a write EPC test (using random data)<br>• read—performs a read EPC test<br>• write—performs a write EPC test (using random data) |
| | SGD commands used: | rfid.tag.test.content and rfid.tag.test.execute |
| Programming Position | If the desired programming position (read/write position) is not achieved through RFID tag calibration, a value may be specified. See the RFID Programming Guide 3 (available from zebra.com/manuals) for more information. | |



zebracod.ir

**Table 8** RFID Menu (Continued)

| RFID Setting | Description | |
|---|---|---|
| | User menu item: | Main Menu > **RFID**<br>RFID PROGRAM POS.<br>F0 |
| | Accepted values: | • F0 to Fxxx (where xxx is the label length in millimeters or 999, whichever is less)—The printer feeds the label forward for the specified distance and then begins programming.<br>• B0 to B30—The printer backfeeds the label for the specified distance and then begins programming. To account for the backfeed, allow empty media liner to extend out of the front of the printer when using a backward programming position. |
| | Related ZPL command(s): | ^RS |
| | SGD command used: | rfid.position.program |
| | rinter web page: | **View and Modify Printer Settings** > **RFID Setup** > **PROGRAM POSITION** |
| RFID Antenna Element | If the desired antenna is not achieved through RFID tag calibration, a value may be specified. | |



zebracod.ir

**Table 8** RFID Menu (Continued)

| RFID Setting | Description | |
|---|---|---|
| | User menu item:<br>* This menu item appears only if a wired or wireless print server is installed in your printer. | Main Menu > **RFID**<br>RFID ANTENNA<br>A4 |
| | Accepted values: | • A1, A2, A3, A4<br>• B1, B2, B3, B4<br>• C1, C2, C3, C4<br>• D1, D2, D3, D4<br>• E1, E2, E3, E4 |
| | Related ZPL command(s): | ^RW |
| | SGD command used: | rfid.reader_1.antenna_port |
| | Printer web page: | **View and Modify Printer Settings** > **RFID Setup** > **RFID ANTENNA** |
| RFID Read Power | If the desired read power is not achieved through RFID tag calibration, a value may be specified. | |
| | User menu item: | Main Menu > **RFID**<br>RFID READ POWER<br>16 |
| | Accepted values: | 0 to 30 |
| | Related ZPL command(s): | ^RW |



zebracod.ir

**Table 8** RFID Menu (Continued)

| RFID Setting | Description | |
|---|---|---|
| | SGD command used: | rfid.reader_1.power.read |
| | Printer web page: | **View and Modify Printer Settings** > **RFID Setup** > **RFID READ PWR** |
| RFID Write Power | If the desired write power is not achieved through RFID tag calibration, a value may be specified. | |
| | User menu item: | Main Menu > **RFID**<br>RFID WRITE POWER<br>16 |
| | Accepted values: | 0 to 30 |
| | Related ZPL command(s): | ^RW |
| | SGD command used: | rfid.reader_1.power.write |
| | Printer web page: | **View and Modify Printer Settings** > **RFID Setup** > **RFID WRITE PWR** |
| RFID Valid Counter | Resets the RFID valid label counter to zero. | |
| | User menu item: | Main Menu > **RFID**<br>RFID VALID COUNT<br>0<br>RESET |
| | Related ZPL command(s): | ~R0 |
| | SGD command used: | odometer.rfid.valid_resettable |



zebracod.ir

**Table 8** RFID Menu (Continued)

| RFID Setting | Description | |
|---|---|---|
| RFID Void Counter | Resets the RFID void label counter to zero. | |
| | User menu item: | Main Menu > **RFID**<br> 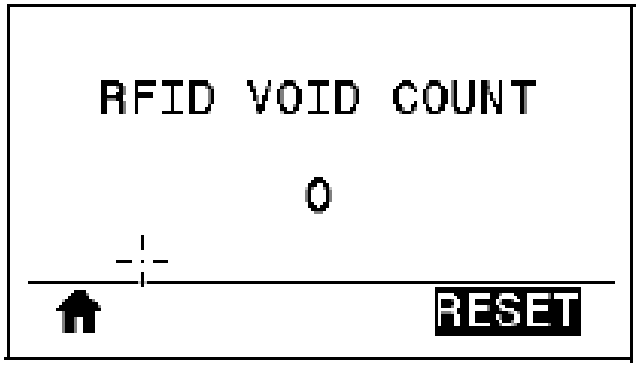 |
| | Related ZPL command(s): | ~R0 |
| | SGD command used: | odometer.rfid.void_resettable |

## Language Settings

**Table 9** LANGUAGE Menu

| Language Setting | Description |
|---|---|
| Language | If necessary, change the language that the printer displays.<br>This change affects the words shown on the following:<br>• the Home menu<br>• the user menus<br>• error messages<br>• the printer configuration label, the network configuration label, and other labels that you can select to print through the user menus |



zebracod.ir

**Table 9** LANGUAGE Menu (Continued)

| Language Setting | Description | |
|---|---|---|
| | User menu item: | Main Menu > **SETTINGS**<br>Main Menu > **LANGUAGE**<br>LANGUAGE<br>▼ ENGLISH ▲<br>**NOTE:** The selections for this parameter are displayed in the actual languages to make it easier for you to find one that you are able to read. |
| | Accepted values: | ENGLISH, SPANISH, FRENCH, GERMAN, ITALIAN, NORWEGIAN, PORTUGUESE, SWEDISH, DANISH, SPANISH 2, DUTCH, FINNISH, CZECH, JAPANESE, KOREAN, ROMANIAN, RUSSIAN, POLISH, SIMPLIFIED CHINESE, TRADITIONAL CHINESE |
| | Related ZPL command(s): | ^KL |
| | SGD command used: | `display.language` |
| | Printer web page: | **View and Modify Printer Settings** > **General Setup** > **Language** |
| Command Character | The format command prefix is a two-digit hex value used as a parameter place marker in ZPL/ZPL II format instructions. The printer looks for this hex character to indicate the start of a ZPL/ZPL II format instruction.<br>Set the format command character to match what is used in your label formats.<br>**IMPORTANT:** You cannot use the same hex value for the format command prefix, control character, and delimiter characters. The printer must see different characters to work properly. If you are setting the value through the control panel, the printer will skip any value that is already in use. | |



zebracod.ir

**Table 9** LANGUAGE Menu (Continued)

| Language Setting | Description | |
|---|---|---|
| | User menu item: | Main Menu > **LANGUAGE**<br>COMMAND CHAR<br>▼ ^ (5E) ▲ |
| | Accepted values: | 00 to FF |
| | Related ZPL command(s): | ^CC or ~CC |
| | SGD command used: | `zpl.caret` |
| | Printer web page: | **View and Modify Printer Settings** > **ZPL Control** |
| Control Character | The printer looks for this two-digit hex character to indicate the start of a ZPL/ZPL II control instruction. Set the control prefix character to match what is used in your label formats. | |
| | User menu item: | Main Menu > **LANGUAGE**<br>CONTROL CHAR<br>▼ ~ (7E) ▲ |
| | Accepted values: | 00 to FF |
| | Related ZPL command(s): | ^CT or ~CT |
| | SGD command used: | `zpl.control_character` |
| | Printer web page: | **View and Modify Printer Settings** > **ZPL Control** |
| Delimiter Character | Set the Delimiter Character Value<br>The delimiter character is a two-digit hex value used as a parameter place marker in ZPL/ZPL II format instructions.<br>Set the delimiter character to match what is used in your label formats. | |



zebracod.ir

**Table 9** LANGUAGE Menu (Continued)

| Language Setting | Description | |
|---|---|---|
| | User menu item: | Main Menu > **LANGUAGE**<br>DELIMITER CHAR<br>▼ , (2C) ▲ |
| | Accepted values: | 00 to FF |
| | Related ZPL command(s): | ^CD or ~CD |
| | SGD command used: | `zpl.delimiter` |
| | Printer web page: | **View and Modify Printer Settings** > **ZPL Control** |
| ZPL Mode | Select the mode that matches what is used in your label formats.<br>This printer accepts label formats written in either ZPL or ZPL II, eliminating the need to rewrite any ZPL formats that already exist. The printer remains in the selected mode until it is changed in one of the ways listed here. | |
| | User menu item: | Main Menu > **LANGUAGE**<br>ZPL MODE<br>▼ ZPL II ▲ |
| | Accepted values: | • ZPL II<br>• ZPL |
| | Related ZPL command(s): | ^SZ |
| | SGD command used: | `zpl.zpl_mode` |
| | Printer web page: | **View and Modify Printer Settings** > **ZPL Control** |



zebracod.ir

## Sensor Settings

**Table 10** SENSORS Menu

| Sensor Setting | Description | |
|---|---|---|
| Sensor Type | Select the media sensor that is appropriate for the media that you are using. The reflective sensor can be used with all media types. The transmissive sensor should be used only for simple gap media. | |
| | User menu item: | Main Menu > **SENSORS**<br>SENSOR TYPE<br>▼ TRANSMISSIVE ▲ |
| | Accepted values: | • TRANSMISSIVE<br>• REFLECTIVE |
| | Related ZPL command(s): | ^JS |
| | SGD command used: | `device.sensor_select` |
| | Printer web page: | **View and Modify Printer Settings** > **Media Setup** |
| Label Sensor | Set the sensitivity of the label sensor.<br>**IMPORTANT:** This value is set during sensor calibration. Do NOT change this setting unless you are told to do so by Zebra Technical Support or by an authorized service technician. | |
| | User menu item: | Main Menu > **SENSORS**<br>LABEL SENSOR<br>▼ 197 ▲ |
| | Accepted values: | 0 – 255 |
| | SGD command used: | `ezpl.label_sensor` |



zebracod.ir

**Table 10** SENSORS Menu (Continued)

| Sensor Setting | Description | |
|---|---|---|
| | Printer web page: | **View and Modify Printer Settings** > **Calibration** |
| Take Label | Set the intensity of the take label LED.<br>**IMPORTANT:** This value is set during sensor calibration. Do NOT change this setting unless you are told to do so by Zebra Technical Support or by an authorized service technician. | |
| | User menu item: | Main Menu > **SENSORS**<br>TAKE LABEL<br>▼ 50 ▲ |
| | Accepted values: | 0 – 255 |
| | SGD command used: | `ezpl.take_label` |
| | Printer web page: | **View and Modify Printer Settings** > **Calibration** |

## Port Settings

**Table 11** PORTS Menu

| Port Setting | Description |
|---|---|
| Baud Rate | Select the baud value that matches the one being used by the host computer. |



zebracod.ir

**Table 11** PORTS Menu (Continued)

| Port Setting | Description | |
|---|---|---|
| | User menu item: | Main Menu > **PORTS**<br>BAUD RATE<br>▼ 9600 ▲ |
| | Accepted values: | • 115200<br>• 57600<br>• 38400<br>• 28800<br>• 19200<br>• 14400<br>• 9600<br>• 4800 |
| | Related ZPL command(s): | ^SC |
| | SGD command used: | comm.baud |
| | Printer web page: | **View and Modify Printer Settings** > **Serial Communications Setup** |
| Data Bits | Select the data bits value that matches the one being used by the host computer. | |
| | User menu item: | Main Menu > **PORTS**<br>DATA BITS<br>▼ 8 ▲ |
| | Accepted values: | 7 or 8 |

Zebracod.ir



zebracod.ir

**Table 11** PORTS Menu (Continued)

| Port Setting | Description | |
|---|---|---|
| | Related ZPL command(s): | ^SC |
| | SGD command used: | comm.data_bits |
| | Printer web page: | **View and Modify Printer Settings** > **Serial Communications Setup** |
| Parity | Select the parity value that matches the one being used by the host computer. | |
| | User menu item: | Main Menu > **PORTS**<br>PARITY<br>▼ NONE ▲ |
| | Accepted values: | • NONE<br>• EVEN<br>• ODD |
| | Related ZPL command(s): | ^SC |
| | SGD command used: | comm.parity |
| | Printer web page: | **View and Modify Printer Settings** > **Serial Communications Setup** |
| Host Handshake | Select the handshake protocol that matches the one being used by the host computer. | |



zebracod.ir

**Table 11** PORTS Menu (Continued)

| Port Setting | Description | |
|---|---|---|
| | User menu item: | Main Menu > **PORTS**<br>HOST HANDSHAKE<br>▼ XON/XOFF ▲ |
| | Accepted values: | • XON/XOFF<br>• RTS/CTS<br>• DSR/DTR |
| | Related ZPL command(s): | ^SC |
| | SGD command used: | comm.handshake |
| | Printer web page: | **View and Modify Printer Settings** > **Serial Communications Setup** |
| Wireless Markup Language (WML) Version | View the WML version. This value cannot be changed. | |
| | User menu item: | Main Menu > **PORTS**<br>ZEBRA TECHNOLOGIES<br>WML G1.05 ©<br>zebra.com/support |



zebracod.ir

## Bluetooth Settings

**Table 12** BLUETOOTH Menu

| Bluetooth Setting | Description | |
|---|---|---|
| Bluetooth Address | Displays the printer's Bluetooth Device Address | |
| | User menu item: | Main Menu > **BLUETOOTH**<br>BLUETOOTH ADDRESS<br>AC:3F:A4:12:0E:CA |
| | SGD command used: | bluetooth.address |
| Connection Device Type | Displays the Bluetooth connection pair printer's device type—Peripheral (typical) or Central. | |
| | User menu item: | Main Menu > **BLUETOOTH**<br>MODE<br>PERIPHERAL |

zebracod.ir



zebracod.ir

**Table 12** BLUETOOTH Menu (Continued)

| Bluetooth Setting | Description | |
|---|---|---|
| Bluetooth Discovery | Select if the printer is “Discoverable” for Bluetooth device pairing. | |
| | User menu item: | Main Menu > **BLUETOOTH**<br>DISCOVERY<br>ON |
| | Accepted values: | • ON—enables Bluetooth discoverable mode<br>• OFF—disables Bluetooth discoverable mode |
| | SGD command used: | bluetooth.discoverable |
| Connection Status to Paired Device | Displays the Bluetooth connection status to its paired device (Yes or No). | |
| | User menu item: | Main Menu > **BLUETOOTH**<br>CONNECTED<br>NO |



zebracod.ir

**Table 12** BLUETOOTH Menu (Continued)

| Bluetooth Setting | Description | |
|---|---|---|
| Bluetooth Specification Version | Displays the Bluetooth operational specification level. | |
| | User menu item: | Main Menu > **BLUETOOTH**<br>BT SPEC VERSION<br>2.1 |
| | SGD command used: | bluetooth.radio_version |
| Minimum Security Level | Displays the printer's Bluetooth minimum level of applied security. | |
| | User menu item: | Main Menu > **BLUETOOTH**<br>MIN SECURITY MODE<br>1 |

## Calibrating the Ribbon and Media Sensors

Use the procedure in this section to calibrate the printer, which adjusts the sensitivity of the media and ribbon sensors. Calibration assures proper alignment of the image being printed and the optimal print quality.

Perform calibration in the following situations:

- You switched to a different size or type of ribbon or media.



zebracod.ir

- The printer experiences any of the following issues:
  - skipping labels
  - the printed image is wandering/drifting side-to-side or up-down
  - ribbon is not being detected when it is installed or when it runs out
  - non-continuous labels are being treated as continuous

## Performing Auto Calibration

You can set the printer to perform an auto calibration or a short calibration using the POWER UP ACTION or HEAD CLOSE ACTION parameters.

- CALIBRATE—adjusts sensor levels and thresholds, determines the label length, and feeds the media to the next web.
- SHORT CAL—sets the media and web thresholds without adjusting sensor gain, determines the label length, and feeds the media to the next web.

See Power-Up Action or Head-Close Action in Calibration, Diagnostic, and Other Tools on page 82.

## Performing Manual Sensor Calibration

**IMPORTANT:** Follow the calibration procedure exactly as presented. All of the steps must be performed even if only one of the sensors requires adjustment. You may press and hold **CANCEL** at any step in this procedure to cancel the process.

For issues that may be resolved by sensor calibration, see Printing Issues on page 167.

For a summary of the options for initiating calibration, see Media and Ribbon Sensor Calibration in Calibration, Diagnostic, and Other Tools on page 82.

1. With the printer in the Ready state, initiate media and ribbon calibration in one of these ways:
   - Press and hold **PAUSE** + **CANCEL** for 2 seconds.
   - Send the ezpl.manual_calibration SGD command to the printer. See the Zebra Programming Guide for more information about this command.
   - Navigate to the following menu item on the control panel display. This item is located under the TOOLS menu and the SENSORS menu. See Idle Display, Home Menu, and User Menus on page



zebracod.ir

13 for information about using the control panel and accessing the menus. See the User Guide for information about using the control panel and accessing the menus.

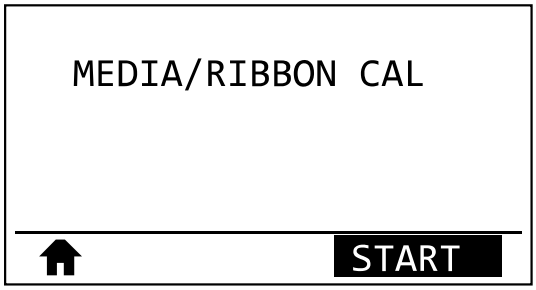


Press **RIGHT SELECT** to select **START**.

The printer does the following:

- The STATUS light and SUPPLIES light flash yellow once.
- The PAUSE light blinks yellow.
- The control panel displays:

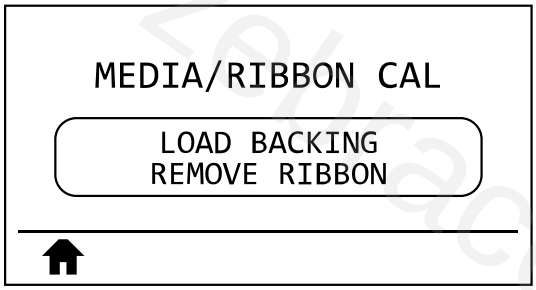


**2.** Open the printhead assembly by rotating the printhead-open lever.

**CAUTION—HOT SURFACE:** The printhead may be hot and could cause severe burns. Allow the printhead to cool.

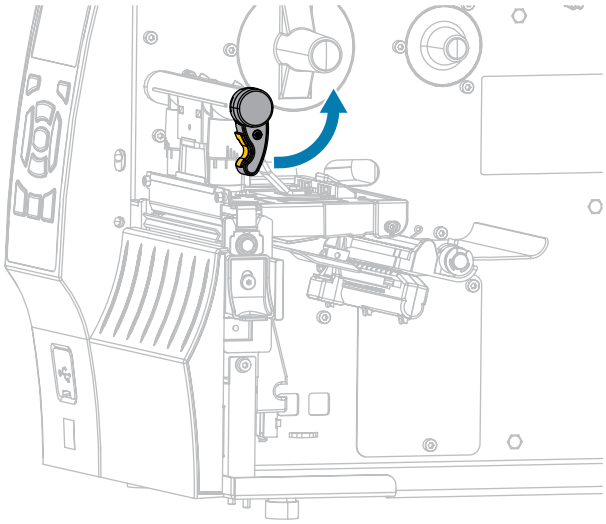



zebracod.ir

3. Extend the media approximately 8 in. (203 mm) out of the printer.

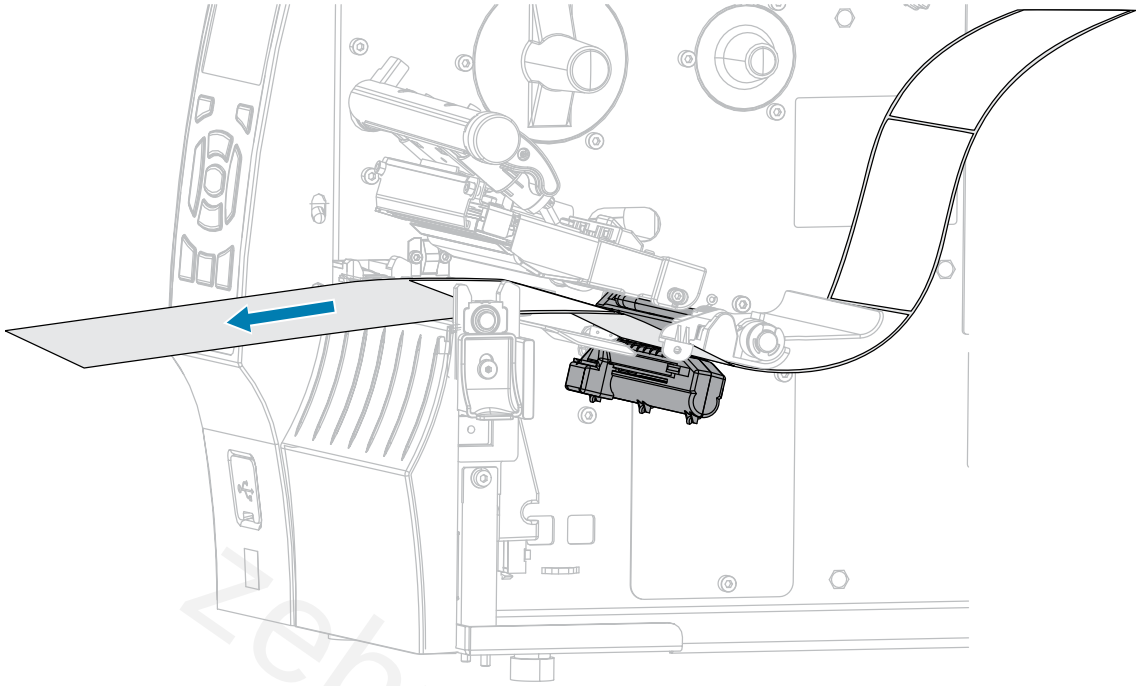

4. Remove the exposed labels so that only the liner remains.

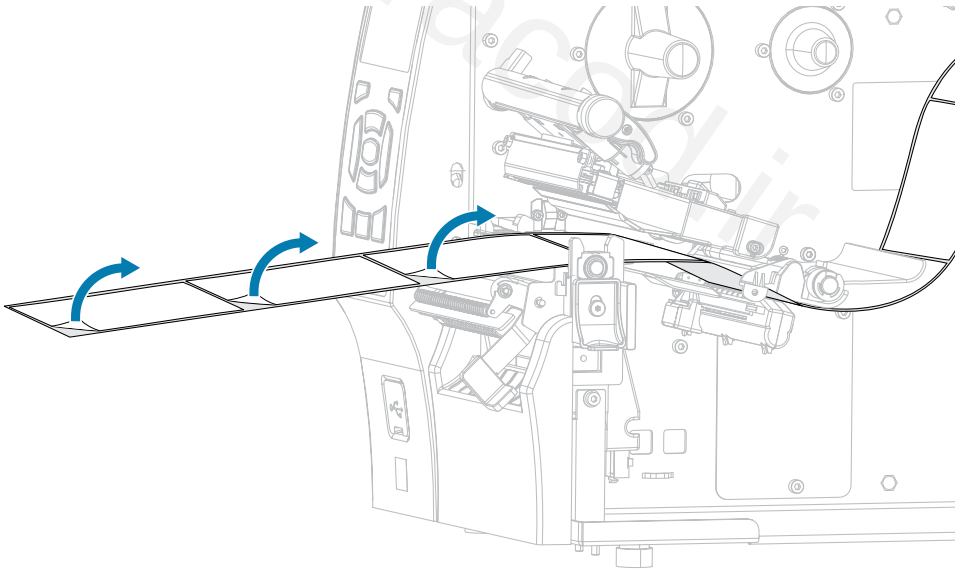



zebracod.ir

5. Pull the media into the printer so that only the backing is between the media sensors.

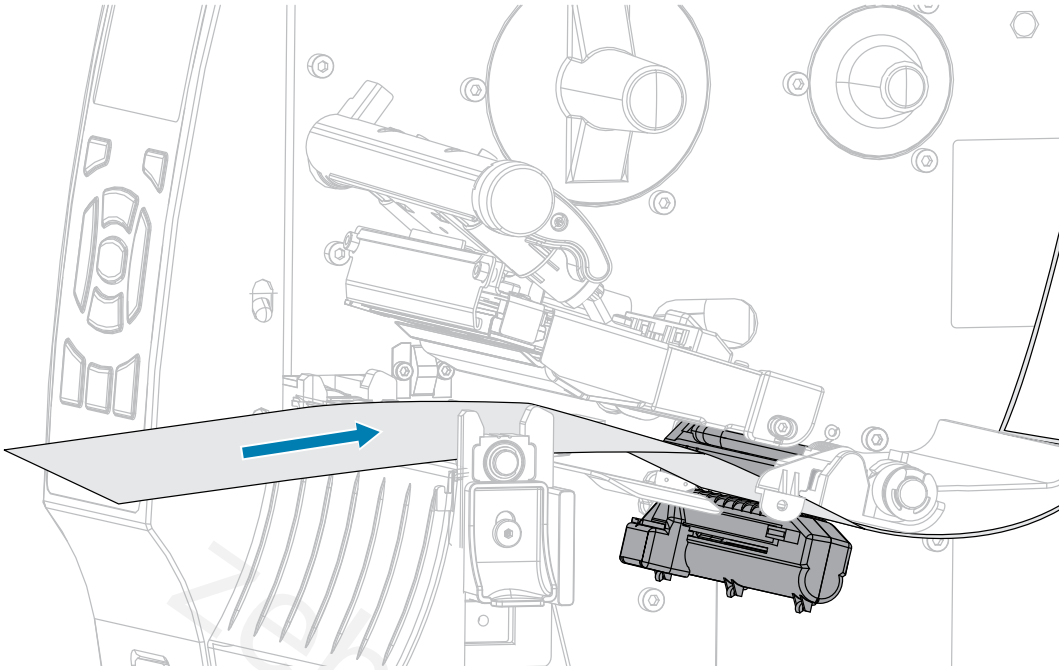

6. Remove the ribbon (if used).
7. Rotate the printhead-open lever downward until it locks the printhead in place.

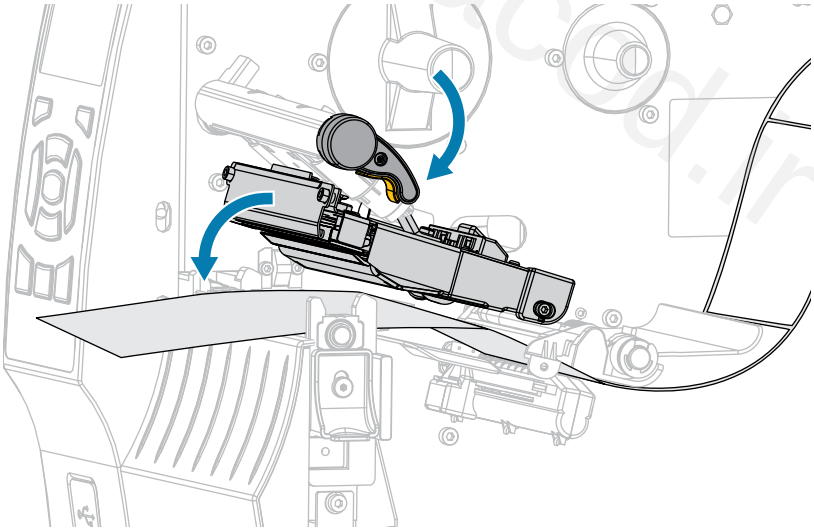



zebracod.ir

8. Press PAUSE to begin the media calibration process.
   - The PAUSE light turns off.
   - The SUPPLIES light flashes.
   - The control panel displays:

```
MEDIA/RIBBON CAL
CALIBRATING
PLEASE WAIT
```

   When the process is complete:
   - The SUPPLIES light stops flashing.
   - The PAUSE light flashes yellow.
   - The control panel displays:

```
MEDIA/RIBBON CAL
RELOAD ALL
CONTINUE
```

9. Open the printhead assembly by rotating the printhead-open lever.

**CAUTION—HOT SURFACE:** The printhead may be hot and could cause severe burns. Allow the printhead to cool.

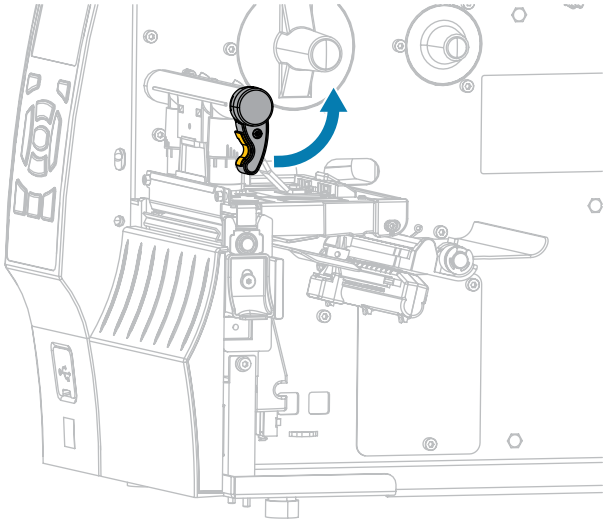



zebracod.ir

10. Pull the media forward until a label is positioned under the media sensors.

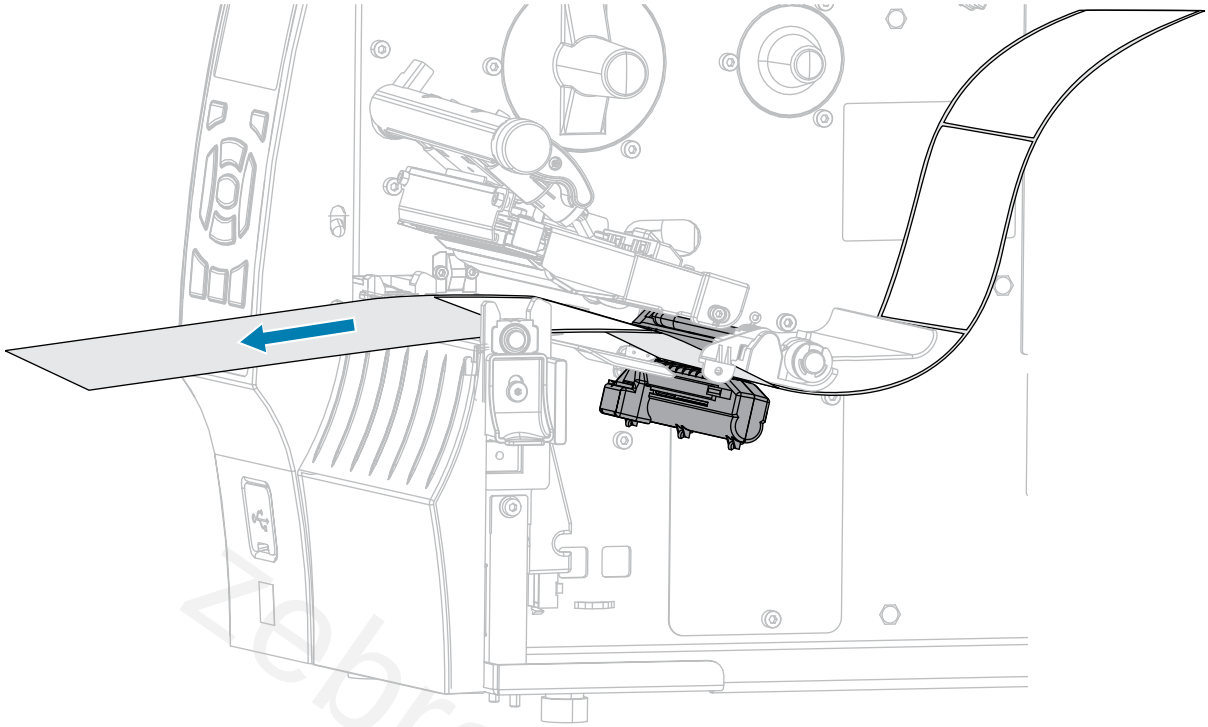

11. Reload the ribbon (if used). See Loading the Ribbon on page 64.
12. Rotate the printhead-open lever downward until it locks the printhead in place.

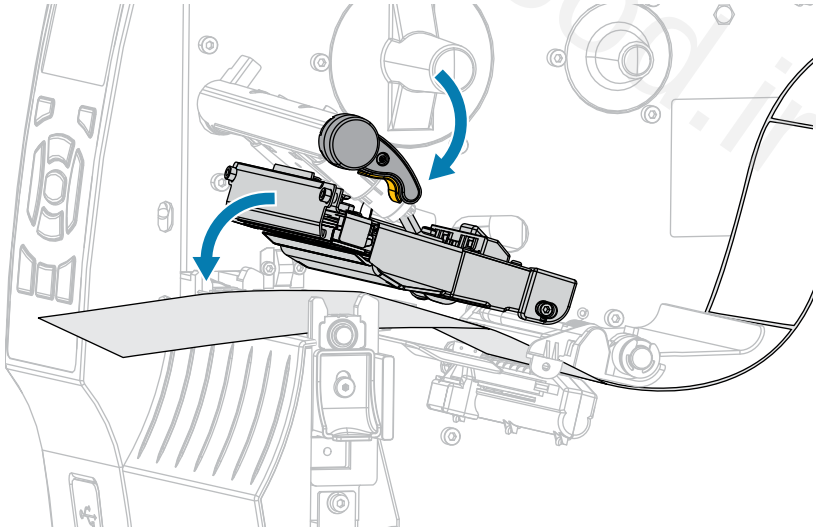



zebracod.ir

13. Close the media door.

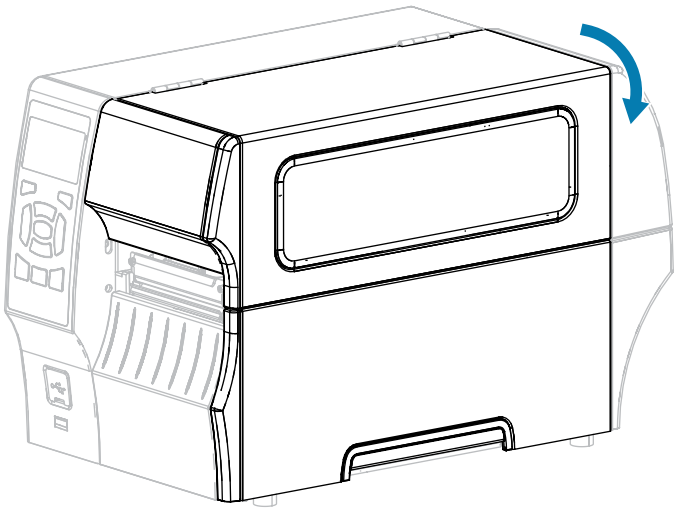

14. Press **PAUSE** to enable printing.
15. Press **FEED** to test if calibration was successful.

If one label feeds correctly each time, the printer is properly calibrated.

## Adjusting the Printhead Pressure

You may need to adjust printhead pressure if:

- printing is too light on one side
- you use thick media
- if the media drifts from side to side during printing

Use the inside and outside printhead pressure adjustment dials to set the printhead pressure. Set the pressure to the lowest level necessary to achieve good print quality. The setting marks on these dials range from 1 to 4.



zebracod.ir

**Figure 7** Printhead Pressure Adjustment Dials

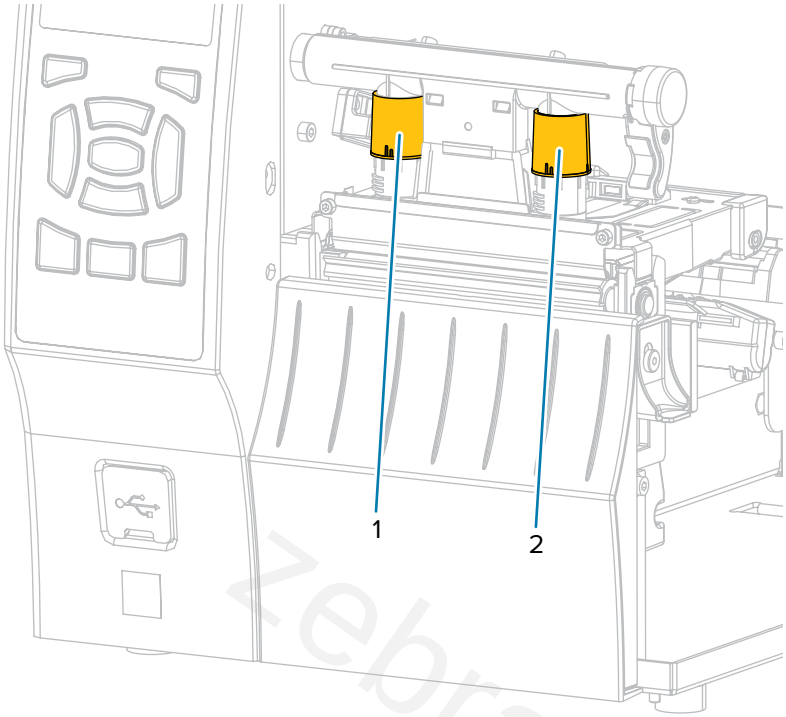


Begin with the pressure settings for your printer model and media width as specified in the following table, and make adjustments to the inside dial (1) and the outside dial (2) as necessary.

**Table 13** Pressure Setting Starting Points

| Printer | Media Width | Inside Dial Setting | Outside Dial Setting |
|---|---|---|---|
| ZT410 | 1 in. (25 mm) | 4 | 1 |
| | 2 in. (51 mm) | 3 | 1 |
| | 3 in. (76 mm) | 2.5 | 1.5 |
| | ≥ 3.5 in. (89 mm) | 2 | 2 |
| ZT420 | 2 in. (51 mm) | 4 | 1 |
| | 3 in. (76 mm) | 3.5 | 1 |
| | 4 in. (102 mm) | 3 | 2 |
| | ≥ 5 in. (127 mm) | 2.5 | 2.5 |

If necessary, adjust the printhead pressure adjustment dials as follows:



zebracod.ir

| If the media... | Then... |
|---|---|
| Requires higher pressure to print well | Increase both dials one position. 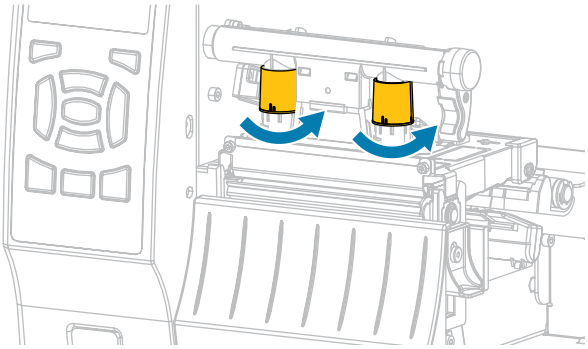 |
| Prints too lightly on the left side of the label. | Increase the inside dial setting one position. 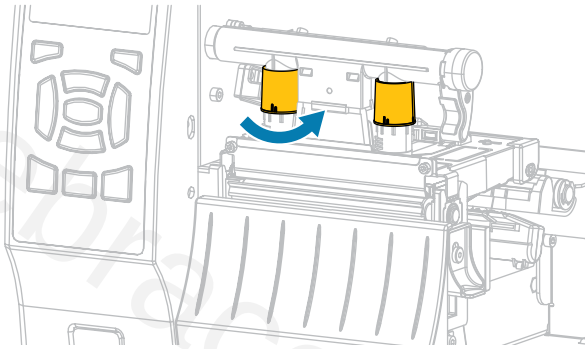 |
| Prints too lightly on the right side of the label. | Increase the outside dial setting one position. 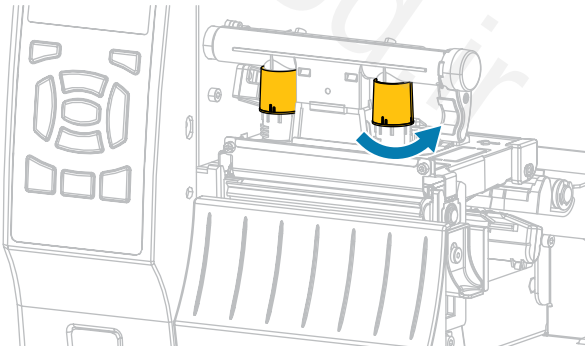 |



zebracod.ir

| If the media... | Then... |
|---|---|
| Shifts left while printing | Increase the outside dial setting one position.<br> 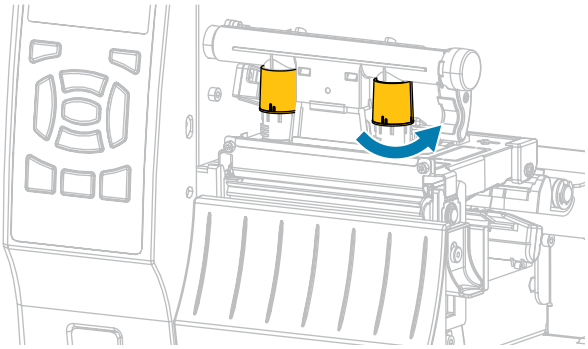 <br>OR<br>Decrease the inside dial setting one position.<br> 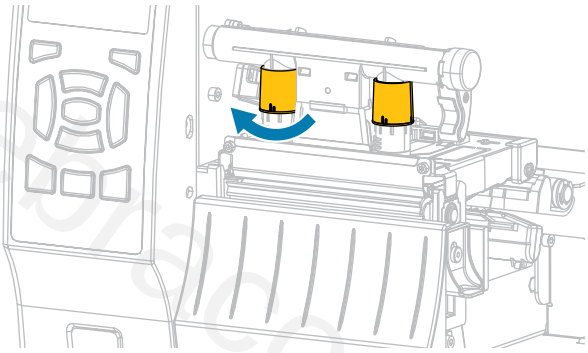 |

zebracod.ir



zebracod.ir

| If the media... | Then... |
|---|---|
| Shifts right while printing | Increase the inside dial setting one position.<br> 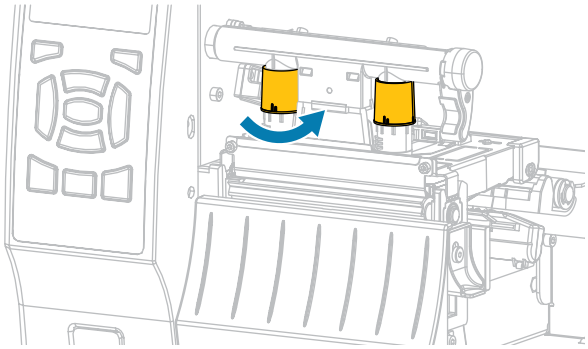 <br>OR<br>Decrease the outside dial setting one position.<br> 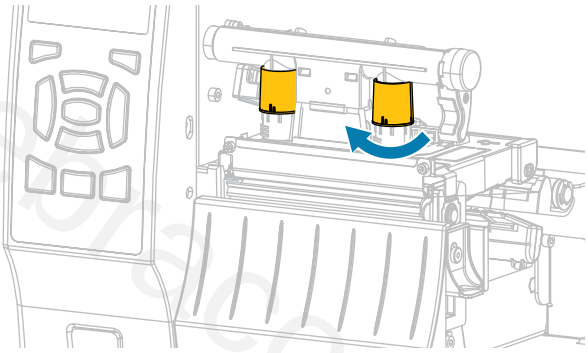 |

zebracod.ir



zebracod.ir

# Routine Maintenance

This section provides routine cleaning and maintenance procedures.

## Cleaning Schedule and Procedures

Routine preventive maintenance is a crucial part of normal printer operation. By taking good care of your printer, you can minimize potential problems and achieve/maintain the desired print quality standards.

Over time, the movement of media or ribbon across the printhead wears through the protective ceramic coating, exposing and eventually damaging the print elements (dots). To avoid abrasion:

- Clean the printhead frequently.
- Minimize printhead pressure and burn temperature (darkness) settings by optimizing the balance between the two.
- When using Thermal Transfer mode, ensure that the ribbon is either as wide or wider than the media. This is to avoid exposing printhead elements to the more abrasive label material.

**IMPORTANT:** Zebra is not responsible for damage caused by the use of cleaning fluids on this printer.

Specific cleaning procedures are included in this section. Follow the recommended cleaning schedule listed in the table below.

**NOTE:** These recommended cleaning intervals are intended as guidelines only. You may have to clean more often depending on your specific application and the media you use for printing.

**Table 14** Recommended Cleaning Schedule

| Area | Method | Interval |
|---|---|---|
| Printhead | Solvent* | Direct Thermal Mode: After every roll of media (or 500 feet of fanfold media).<br>Thermal Transfer Mode: After every roll of ribbon. |
| Platen roller | Solvent* | |
| Media sensors | Air blow | |
| Ribbon sensor | Air blow | |
| Media path | Solvent* | |
| Ribbon path | Solvent* | |
| Pinch roller (part of Peel-Off option) | Solvent* | |



zebracod.ir

**Table 14** Recommended Cleaning Schedule (Continued)

| Area | | Method | Interval |
|---|---|---|---|
| Cutter module | If cutting continuous, pressure-sensitive media | Solvent* | After every roll of media (or more often, depending upon your application and media). |
| | If cutting tag stock or label liner material | Solvent* and air blow | After every two or three rolls of media. |
| Tear-off/peel-off bar | | Solvent* | Once a month. |
| Take-label sensor | | Air blow | Once every six months. |

**NOTE:**

* Zebra recommends using the Preventive Maintenance Kit (p/n 47362 or p/n 105950-035 - multipack). In place of the Preventive Maintenance Kit, you may use a lint-free cloth dipped in 99.7% isopropyl alcohol.

For 600 dpi printers, use Save-a-Printhead cleaning film. This specially-coated material removes contamination buildup without damaging the printhead. Call your authorized reseller or distributor for more information.

## Clean the Exterior, the Media Compartment, and the Sensors

Over time, dust, grime, and other debris may build up on the outside and inside of your printer, particularly in a harsh operating environment.

### Clean the Printer Exterior

You may clean the exterior surfaces of the printer with a lint-free cloth and a small amount of a mild detergent, if necessary. Do not use harsh or abrasive cleaning agents or solvents.

**IMPORTANT:** Zebra is not responsible for damage caused by the use of cleaning fluids on this printer.

### Cleaning the Media Compartment and Sensors

1. Brush, air blow, or vacuum any accumulated paper lint and dust away from the media and ribbon paths.



zebracod.ir

2. Brush, air blow, or vacuum any accumulated paper lint and dust away from the sensors.

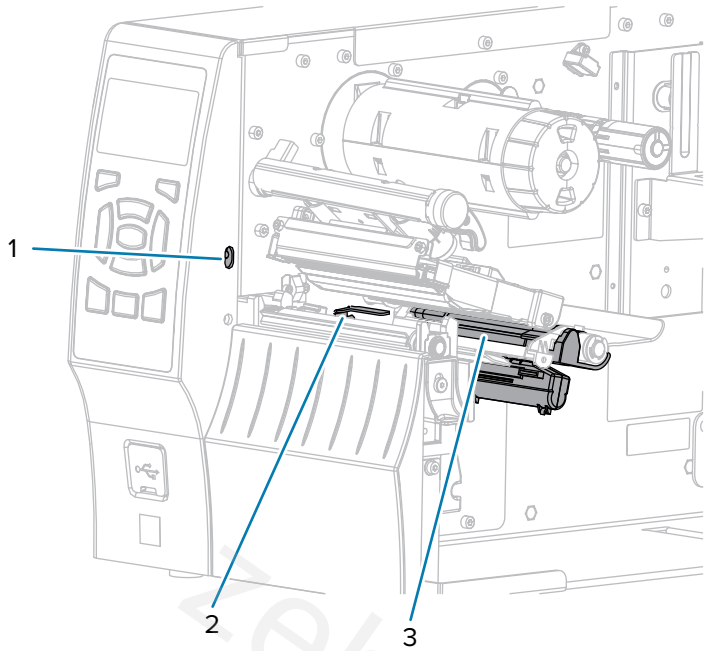


| | |
|---|---|
| 1 | Take-label sensor |
| 2 | Ribbon sensor |
| 3 | Media sensor |

## Cleaning the Printhead and Platen Roller

Inconsistent print quality, such as voids in the barcode or graphics, may indicate a dirty printhead. For the recommended cleaning schedule, see Cleaning Schedule and Procedures on page 134.

**IMPORTANT:**

While you are not required to turn off printer power when working near an open printhead, Zebra recommends it as a precaution.

If you turn off power, you will lose all temporary settings, such as label formats, and you must reload them before you resume printing.

**CAUTION—ESD:** Before touching the printhead assembly, discharge any built-up static electricity by touching the metal printer frame or by using an anti-static wrist-strap and mat.



zebracod.ir

1. Raise the media door.

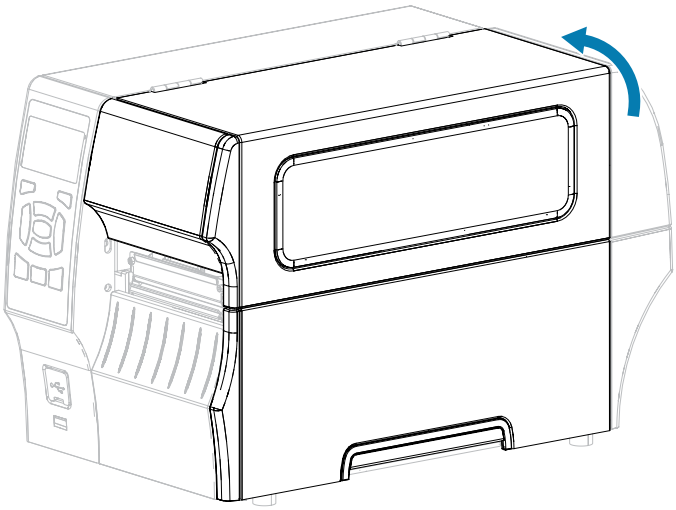

**CAUTION—HOT SURFACE:** The printhead may be hot and could cause severe burns. Allow the printhead to cool.

2. Open the printhead assembly by rotating the printhead-open lever upward.

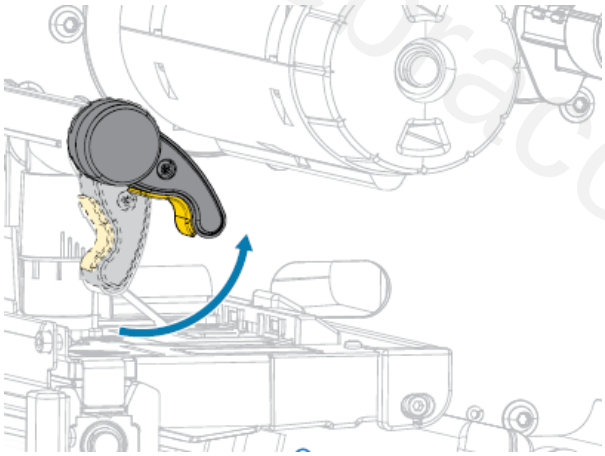

3. Remove the ribbon (if used) and the media.



zebracod.ir

4. Using the swab from a Zebra Preventive Maintenance Kit, wipe along the brown strip on the printhead assembly from end to end. In place of the Preventive Maintenance Kit, you may use a clean swab dipped in 99.7% isopropyl alcohol. Allow the solvent to evaporate.

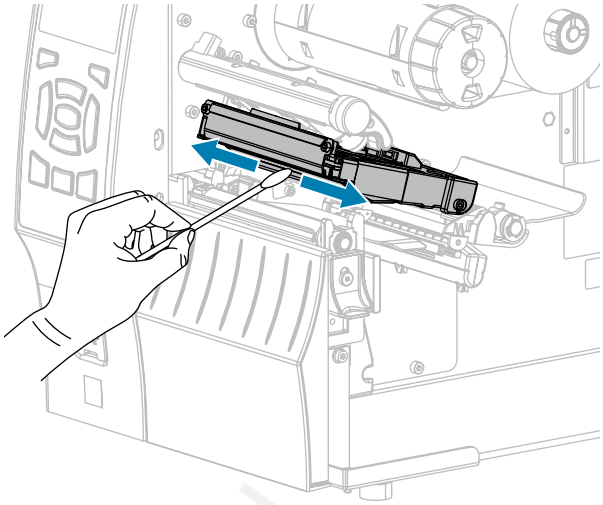

5. While manually rotating the platen roller, clean it thoroughly with the swab. Allow the solvent to evaporate.

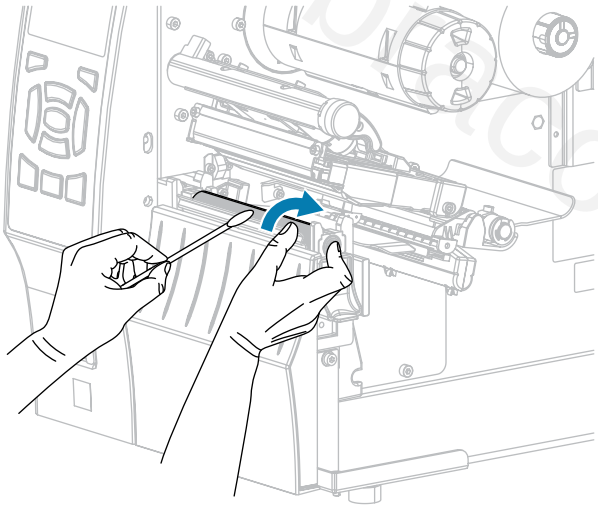

6. Reload the ribbon (if used) and the media. For instructions, see Loading the Ribbon on page 64 or Loading the Media on page 35.



zebracod.ir

7. Rotate the printhead-open lever downward until it locks the printhead in place.

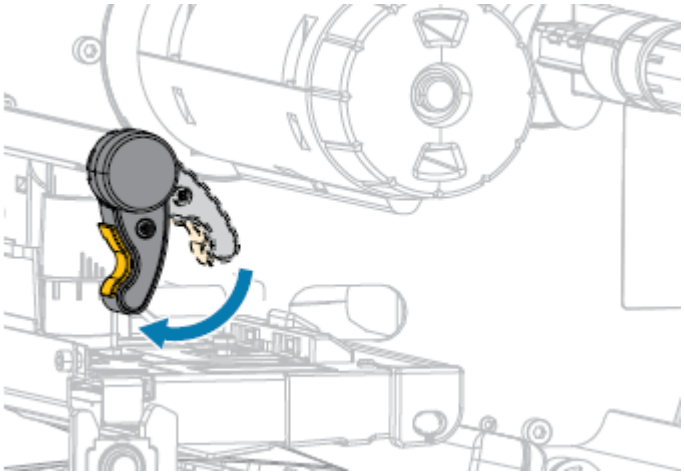

8. Close the media door.

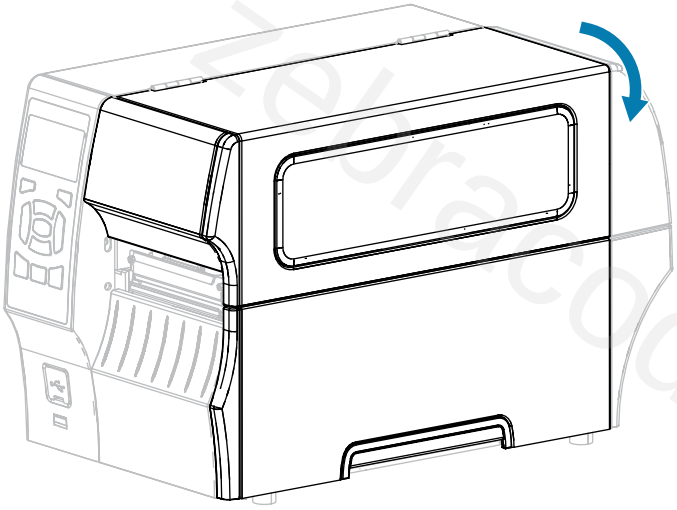

The printer is ready to operate.

9. Press **PAUSE** to exit pause mode and enable printing.

   The printer may perform a label calibration or feed a label, depending on your settings.

**NOTE:** If performing this procedure does not improve print quality, try cleaning the printhead with Save-A-Printhead cleaning film. This specially coated material removes contamination buildup without damaging the printhead. Call your authorized Zebra reseller for more information.

## Cleaning the Peel Assembly

The peel assembly, which is part of the Peel-Off and Liner Take-Up options, consists of several spring-loaded rollers to ensure the proper roller pressure. Clean the pinch roller and tear-off/peel-off bar if adhesive buildup begins to affect peel performance.

**CAUTION:** Do NOT use your left hand to assist in closing the Peel assembly. The top edge of the Peel roller/assembly could pinch your fingers.



zebracod.ir

If adhesive buildup affects peel-off performance, complete these steps:

1. Raise the media door.

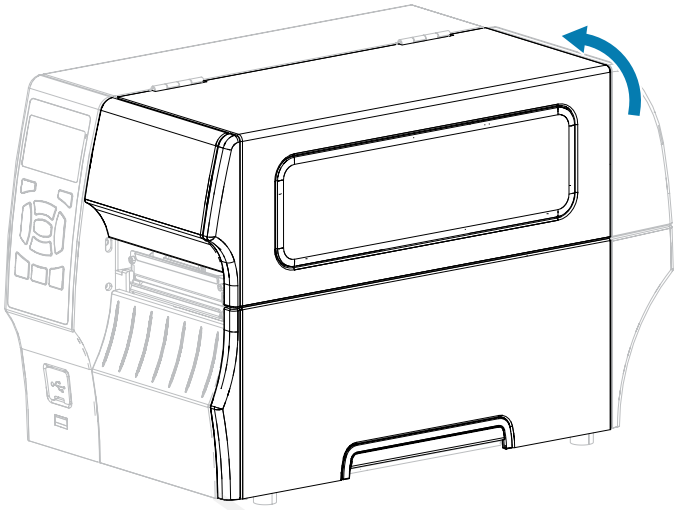

2. Open the printhead assembly by rotating the printhead-open lever upward.

**CAUTION—HOT SURFACE:** The printhead may be hot and could cause severe burns. Allow the printhead to cool.

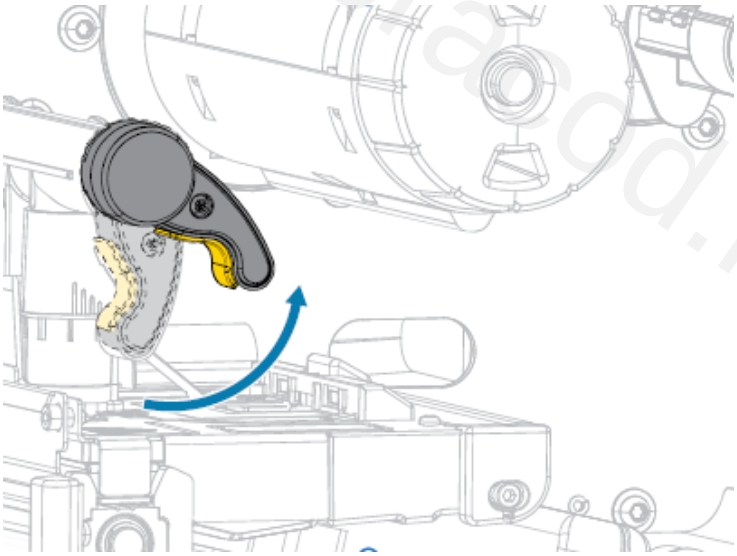



zebracod.ir

3. Push down the peel-off mechanism release lever to open the peel assembly.

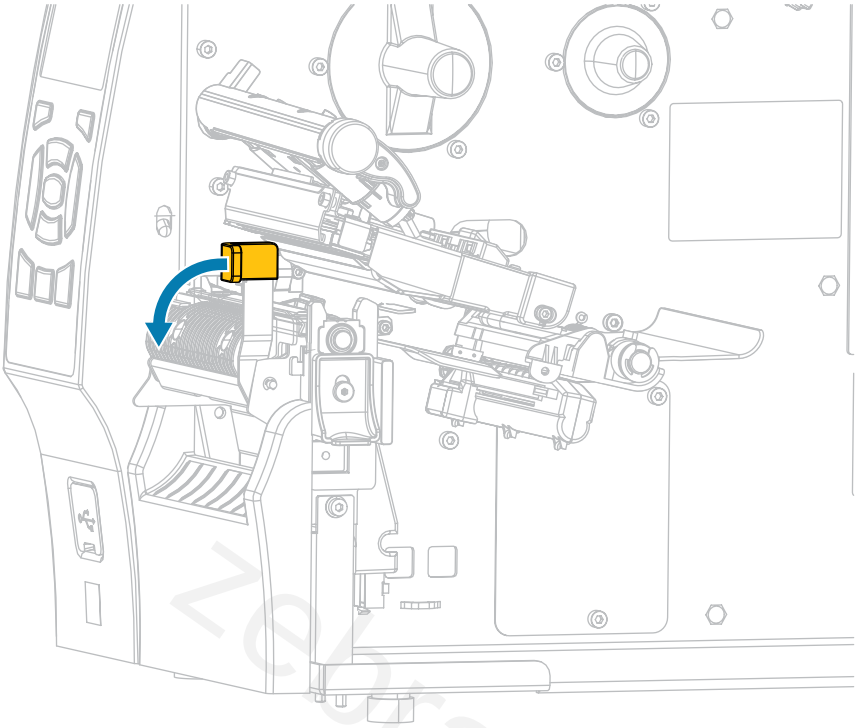

4. Remove any media liner to expose the pinch roller.
5. While manually rotating the pinch roller, clean it thoroughly with the swab from the Preventive Maintenance Kit (part number 47362). In place of the Preventive Maintenance Kit, you may use a clean swab dipped in 99.7% isopropyl alcohol. Allow the solvent to evaporate.

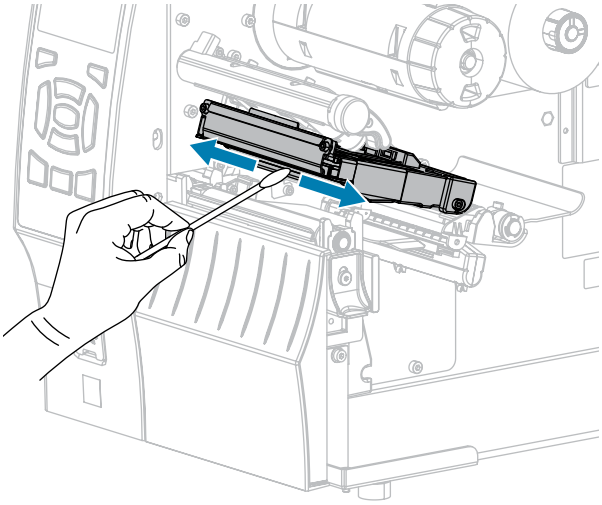



zebracod.ir

6. While manually rotating the platen roller, clean it thoroughly with the swab. Allow the solvent to evaporate.

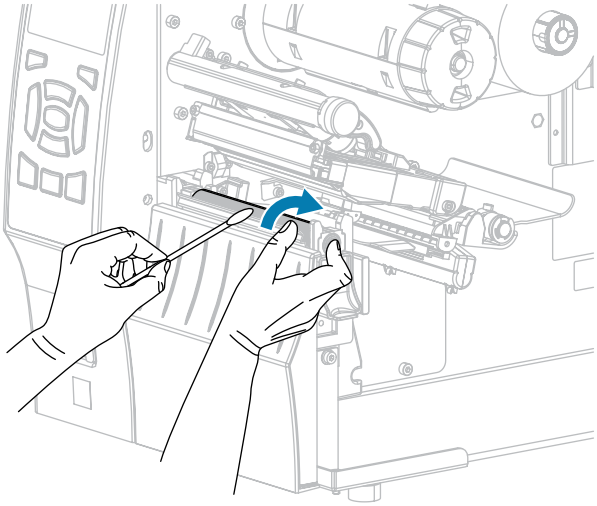

7. Use the swab to remove excess adhesive from the tear-off/peel-off bar. Allow the solvent to evaporate.

**IMPORTANT:** Apply minimum force when cleaning the tear-off/peel-off bar. Excessive force can cause the tear-off/peel-off bar to bend, which could have a negative effect on peel performance.

8. Reload the media through the peel mechanism. For instructions, see Using Peel-Off Mode (with or without Liner Take-Up) on page 42.

9. Close the peel assembly using the peel-off mechanism release lever.

**CAUTION:** Use the peel release lever and your right hand to close the peel assembly. Do not use your left hand to assist in closing. The top edge of the peel roller/assembly could pinch your fingers.

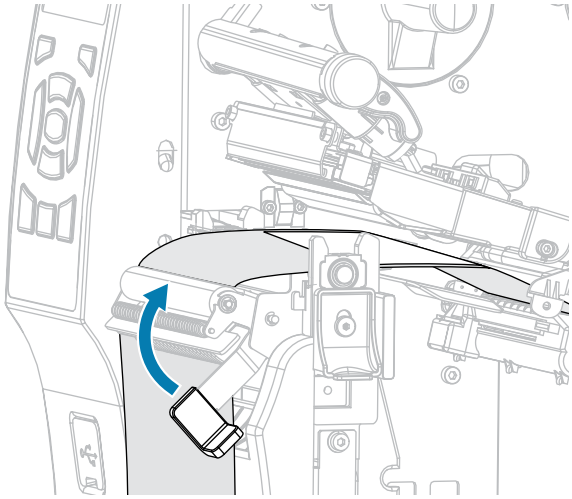



zebracod.ir

10. Rotate the printhead-open lever downward until it locks the printhead in place.

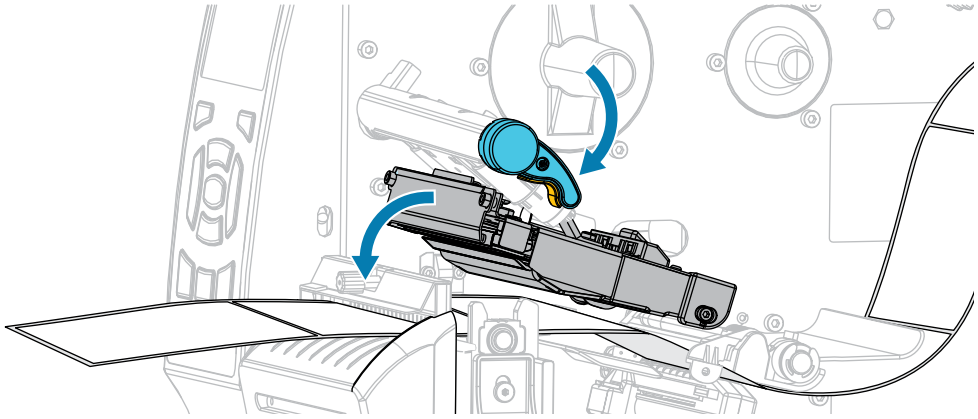

11. Close the media door.

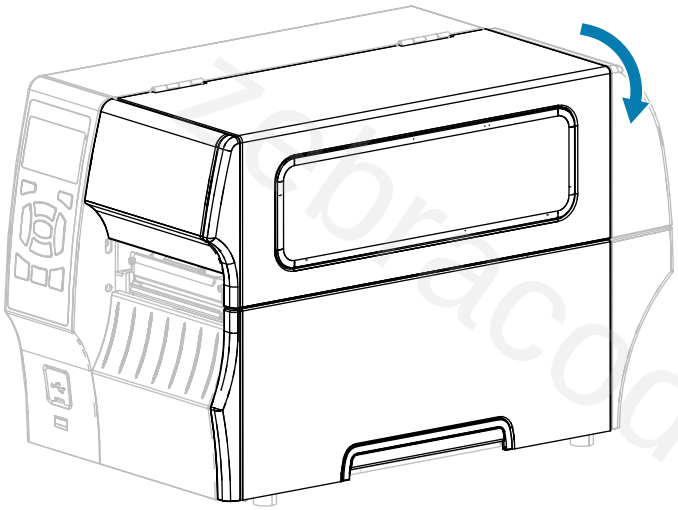

The printer is ready to operate.

12. Press **PAUSE** to exit pause mode and enable printing.

    The printer may perform a label calibration or feed a label, depending on your settings.

## Cleaning and Lubricating the Cutter Module

If the cutter is not cutting the labels cleanly or if it jams with labels, clean the cutter blades. After cleaning the blades, apply lubrication to them to help extend the life of your cutter module.

**CAUTION—ELECTRIC SHOCK:** Turn off the printer (**O**) and disconnect it from the power source before performing the following procedure.

1. Turn off (**O**) the printer and disconnect the AC power cord.



zebracod.ir

2. Raise the media door.

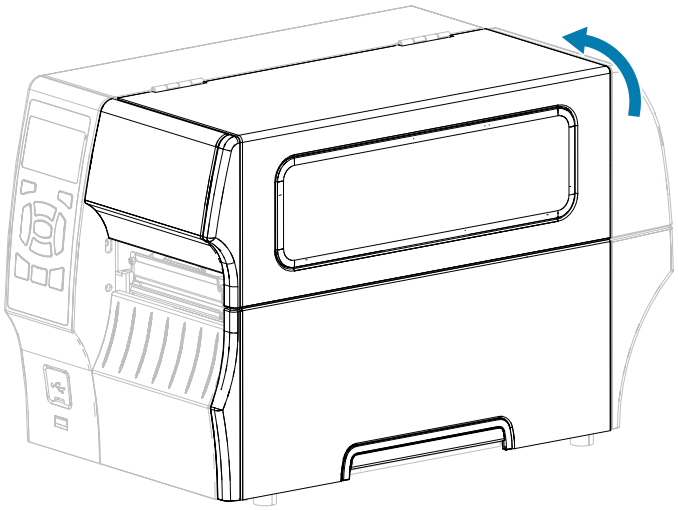

3. Remove media that is loaded through the cutter module.

**CAUTION:** The cutter blade is sharp. Do not touch or rub the blade with your fingers.

4. Loosen and remove the thumbscrew and lock washer on the cutter shield.

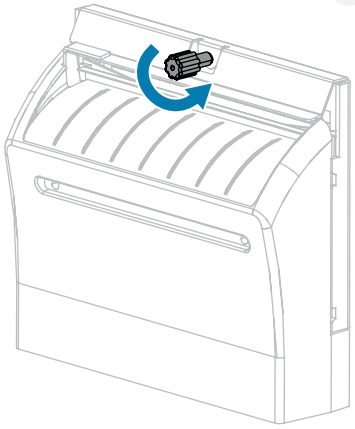

zebracod.ir



zebracod.ir

5. Remove the cutter shield.

**CAUTION:** The cutter blade is sharp. Do not touch or rub the blade with your fingers.

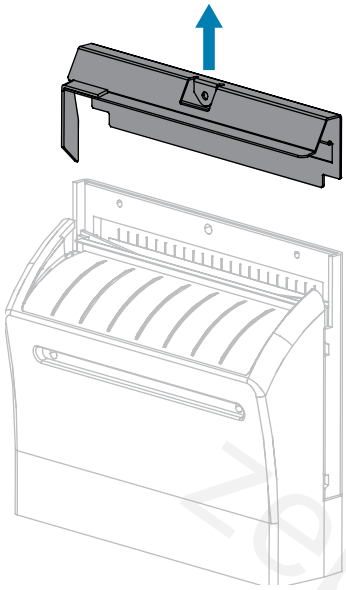

6. If necessary, rotate the cutter motor thumbscrew to fully expose the V-shaped cutter blade (**1**).

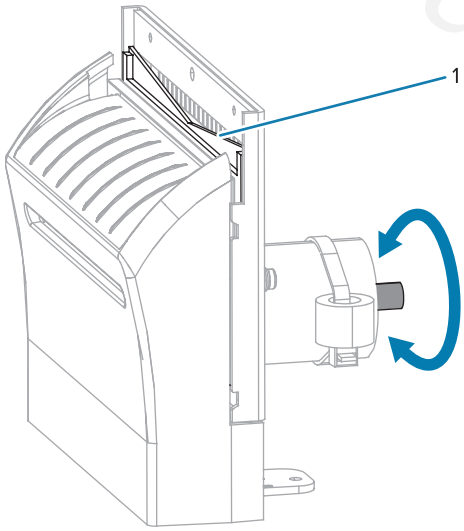


zebracod.ir



zebracod.ir

7. Using the swab from the Preventive Maintenance Kit (part number 47362), wipe along the upper cutting surface and the cutter blade. In place of the Preventive Maintenance Kit , you may use a clean swab dipped in 99.7% isopropyl alcohol. Allow the solvent to evaporate.

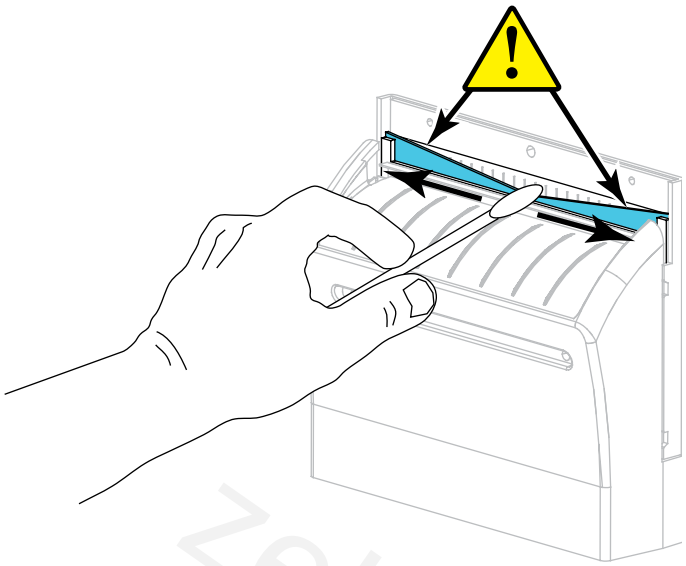

8. When the solvent has evaporated, soak a clean swab in a general-purpose, higher-viscosity silicone or PTFE oil lubricant.

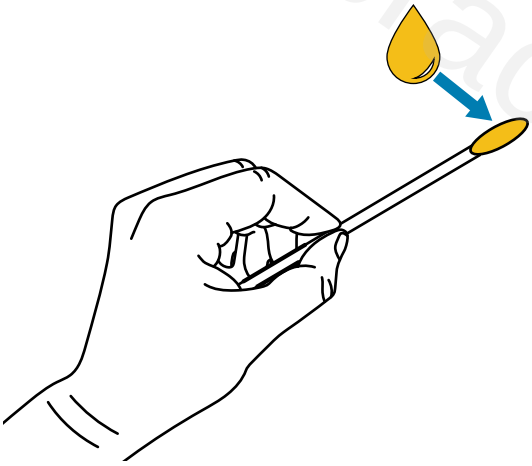

zebracod.ir



zebracod.ir

9. Apply an even layer along all exposed surfaces of both cutter blades. Remove any excess oil so that none of it comes in contact with the printhead or platen roller.

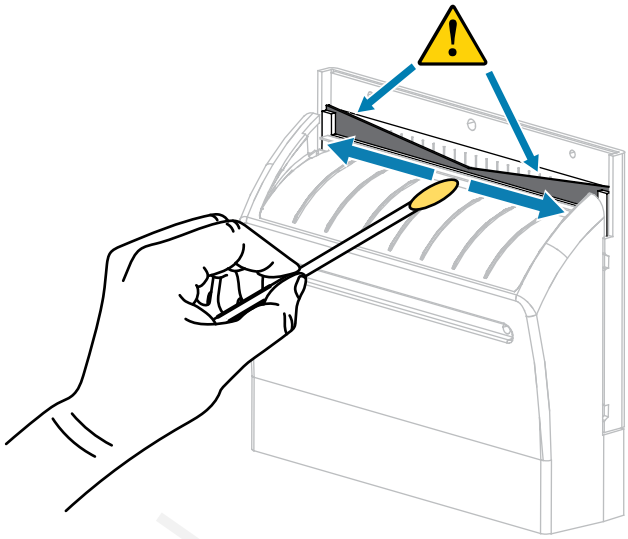

**CAUTION:** The cutter blade is sharp. For operator safety, replace the cutter shield.

10. Replace the cutter shield.

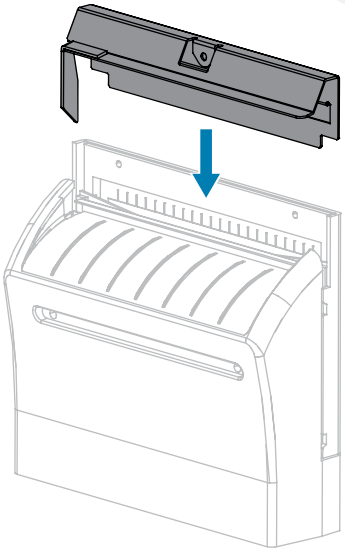

zebracod.ir



zebracod.ir

11. Secure the cutter shield with the thumbscrew and lock washer that you removed earlier.

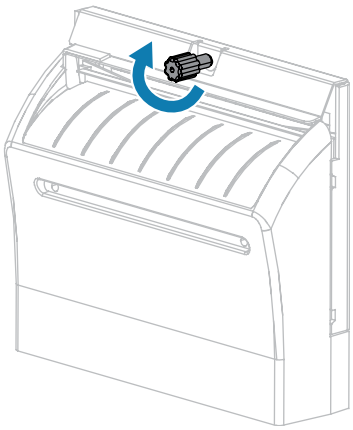

12. Close the media door.

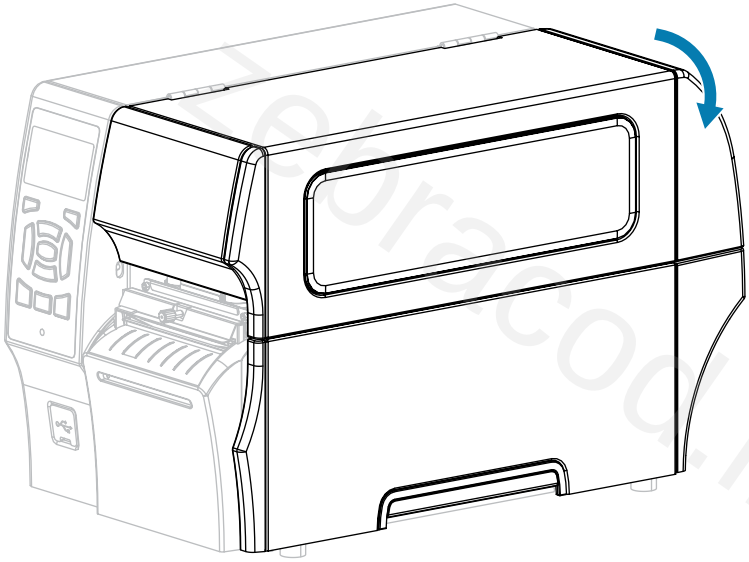

13. Plug the printer into its power source, and then turn on (**I**) the printer.

    The cutter blade returns to its operating position.

14. If the cutter continues to perform unsatisfactorily, contact an authorized service technician for assistance.

## Removing Used Ribbon

At minimum, remove used ribbon from the ribbon take-up spindle each time you change the roll of ribbon.

With ribbon that is half or less the width of the printhead, remove used ribbon each time you load a new roll of media. This ensures that uneven pressure on the ribbon take-up spindle does not interfere with the ribbon release bars on the spindle.

1. Has the ribbon run out?

| If the ribbon... | Then |
|---|---|
| Ran out | Continue with the next step in this procedure. |



zebracod.ir

| If the ribbon... | Then |
|---|---|
| Did not run out | Cut or break the ribbon before the ribbon take-up spindle.<br> 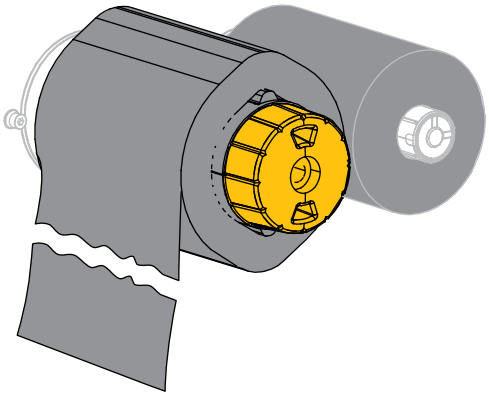 <br>**CAUTION—PRODUCT DAMAGE:** Do not cut the ribbon directly on the ribbon take-up spindle. Doing so may damage the spindle. |

2. While holding the ribbon take-up spindle, turn the ribbon release knob to the left until it stops.

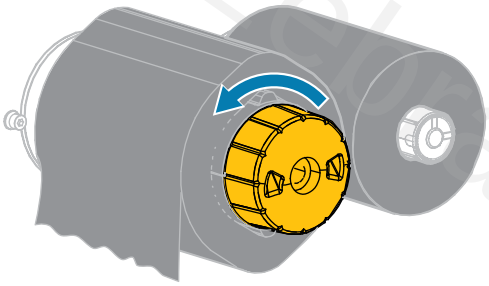

The ribbon release bars pivot down, easing the spindle's grip on the used ribbon.

3. After the ribbon release bars have pivoted down, if possible, turn the ribbon take-up spindle one full turn to the right to help loosen the ribbon on the spindle.
4. Slide the used ribbon off the ribbon take-up spindle and discard.

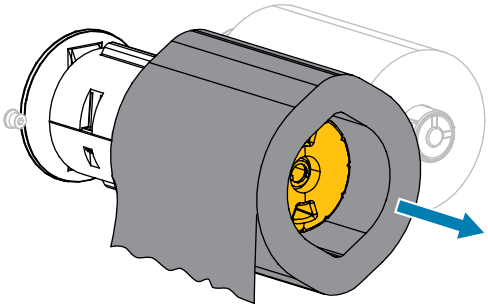

## Replacing Printer Components

Some printer components, such as the printhead and platen roller, may wear out over time and can be replaced easily. Regular cleaning may extend the life of some of these components.

See Cleaning Schedule and Procedures on page 134 for the recommended cleaning intervals.



zebracod.ir

### Ordering Replacement Parts

Zebra printers are designed to work only with genuine Zebra printheads, thus maximizing safety and print quality. Contact your authorized Zebra reseller for part ordering information.

### Recycling Printer Components

The majority of this printer's components are recyclable. The printer's main logic board may include a battery that you should dispose of properly.

Do not dispose of any printer components in unsorted municipal waste. Please dispose of the battery according to your local regulations, and recycle the other printer components according to your local standards. For more information, see zebra.com/environment.

## Storing the Printer

If you are not placing the printer into immediate operation, repackage it using the original packing materials. You may store the printer under the following conditions:

- Temperature: –40°F to 140°F (–40°C to 60°C)
- Relative humidity: 5% to 85% non-condensing

## Lubrication

The only lubrication needed for this printer is for the cutter module.

Follow the instructions in Cleaning and Lubricating the Cutter Module on page 143.

**CAUTION—PRODUCT DAMAGE:** Do not lubricate any other parts of the printer. Some commercially available lubricants will damage the finish and the mechanical parts if used on this printer.



zebracod.ir

# Diagnostics and Troubleshooting

This section provides diagnostic tests and other information that may help you to optimize printing or to troubleshoot issues with your printer.

Videos and additional online information designed to assist you are available here on zebra.com:

- ZT410
- ZT420

## Printer Diagnostics

Self tests and other diagnostics provide specific information about the condition of the printer. The self tests produce sample printouts and provide specific information that helps determine the operating conditions for the printer.

**IMPORTANT:** Use full-width media when performing self tests. If your media is not wide enough, the test labels may print on the platen roller. To prevent this from happening, check the print width, and ensure that the width is correct for the media that you are using.

Each self test is enabled by pressing a specific control panel key or combination of keys while turning on (I) the printer power. Keep the key(s) pressed until the first indicator light turns off. The selected self test automatically starts at the end of the Power-On Self Test. (See Power-On Self Test on page 154.)

**NOTE:** When performing these self tests:

- Do NOT send data to the printer from the host (computer or handheld device).
- When canceling a self test prior to its actual completion, always reset the printer by turning printer power off (**O**) and then on (**I**).
- Be aware that, if your media is shorter than the label to be printed, the test label will continue printing on the next label.

### Evaluating Barcode Quality

Different types of media may require different darkness settings. This section contains a simple but effective method for determining the ideal darkness for printing barcodes that are within specifications.

During the FEED self test, labels are printed at different darkness settings at two different print speeds. The relative darkness and the print speed are printed on each label. The barcodes on these labels may be ANSI-graded to check print quality.

During this test, one set of labels is printed at 2 ips, and another set is printed at 6 ips. The darkness value starts at three settings lower than the printer's current darkness value (relative darkness of –3) and



zebracod.ir

increase until the darkness is three settings higher than the current darkness value (relative darkness of +3).

1. Print a configuration label to show the printer's current settings. (See CANCEL Self-Test on page 155.)
2. Turn off (**O**) the printer.
3. Press and hold **FEED** while turning on (**I**) the printer. Hold **FEED** until the first control panel light turns off.

   The printer prints a series of labels at various speeds and at darkness settings higher and lower than the darkness value shown on the configuration label.

   **Figure 8** FEED Test Label

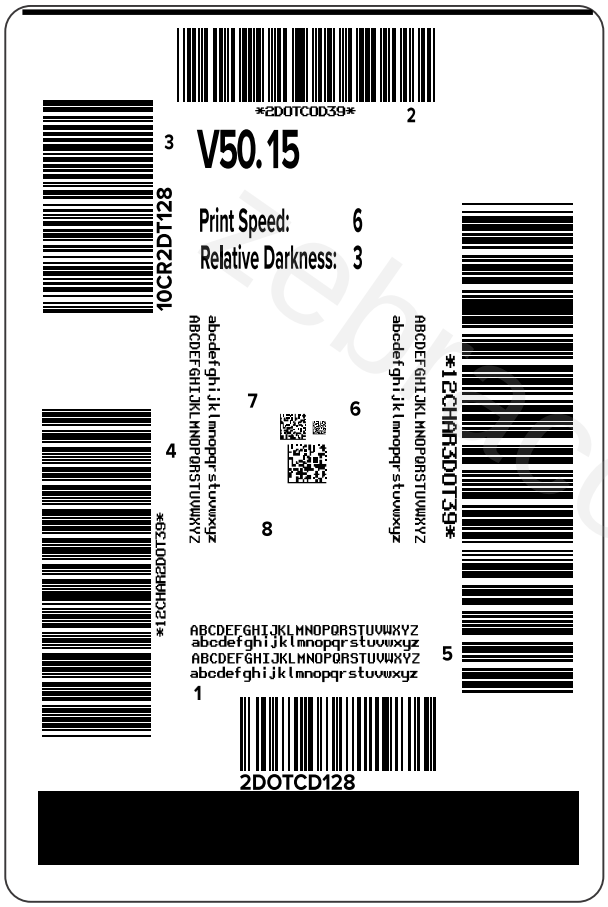


4. Inspect these test labels and determine which one has the optimal print quality for your application. If you have a barcode verifier, use it to measure bars/spaces and calculate the print contrast. If you do not



zebracod.ir

have a barcode verifier, use your eyes or the system scanner to choose the optimal darkness setting based on the labels printed in this self test.

**Figure 9** Evaluating Barcode Quality

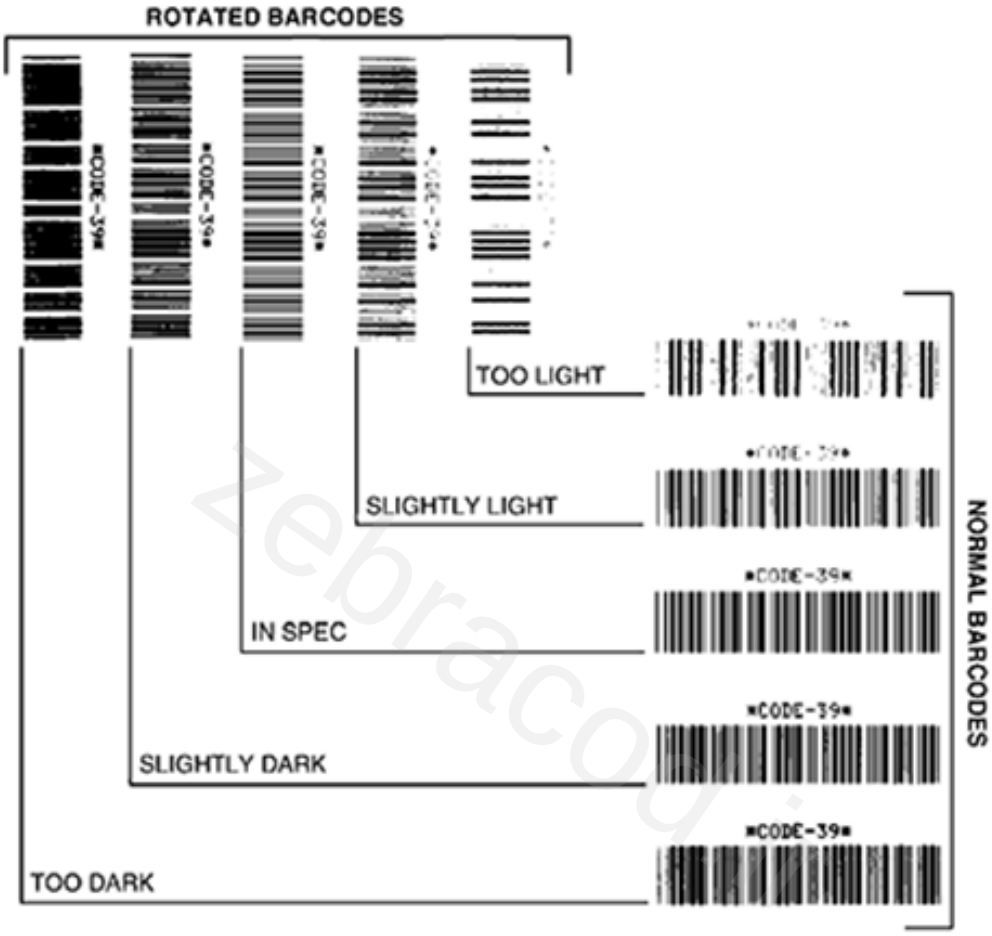


| Appearance | Description |
|---|---|
| Too dark labels | Fairly obvious. These may be readable but are not “in-spec.”<br>• The normal barcode bars increase in size.<br>• The openings in small alphanumeric characters may fill in with ink.<br>• Rotated barcode bars and spaces run together. |
| Slightly dark labels | Not as obvious as the too-dark labels.<br>• The normal barcode will be “in-spec.”<br>• Small alphanumeric characters will be bold, and may appear slightly filled in.<br>• The rotated barcode spaces are small when compared to the “in-spec” code, possibly making the code unreadable. |



zebracod.ir

| Appearance | Description |
|---|---|
| In-spec labels | Whether or not a label is “in-spec” can only be confirmed by a verifier, but they typically exhibit some visible characteristics.<br>• The normal barcode will have complete, even bars along with clear, distinct spaces.<br>• The rotated barcode will have complete, even bars along with clear, distinct spaces. Although it may not look as good as a slightly dark barcode, the barcode will be “in-spec.”<br>• In both normal and rotated styles, small alphanumeric characters will look complete. |
| Slightly light labels | In some cases, these are preferred to slightly dark ones for “in-spec” barcodes.<br>• Both normal and rotated barcodes will be “in-spec,” but small alphanumeric characters may not be complete. |
| Too light labels | These are obvious.<br>• Both normal and rotated barcodes have incomplete bars and spaces.<br>• Small alphanumeric characters are unreadable. |

5. Note the relative darkness value and the print speed printed on the best test label.
6. Add or subtract the relative darkness value from the darkness value specified on the configuration label. The resulting numeric value is the optimal darkness value for that specific label/ribbon combination and print speed.
7. If necessary, change the darkness value to the darkness value on the selected test label.
8. If necessary, change the print speed to the same speed as on the selected test label.

## Power-On Self Test

A Power-On Self Test (POST) is performed each time the printer is turned on (I). During this test, the control panel lights (LEDs) turn on and off to ensure proper operation. At the end of this self test, only the STATUS LED remains lit. When the Power-On Self Test is complete, the media is advanced to the proper position.

- Turn on (I) the printer.

  The POWER LED illuminates. The other control panel LEDs and the LCD monitor the progress and indicate the results of the individual tests. All messages during the POST display in English; however, if the test fails, the resulting messages cycle through the international languages as well.

## PAUSE Self Test

This self test can be used to provide the test labels required when making adjustments to the printer’s mechanical assemblies or to determine if any printhead elements are not working.

The following shows a sample printout.



zebracod.ir

**Figure 10** PAUSE Test Label

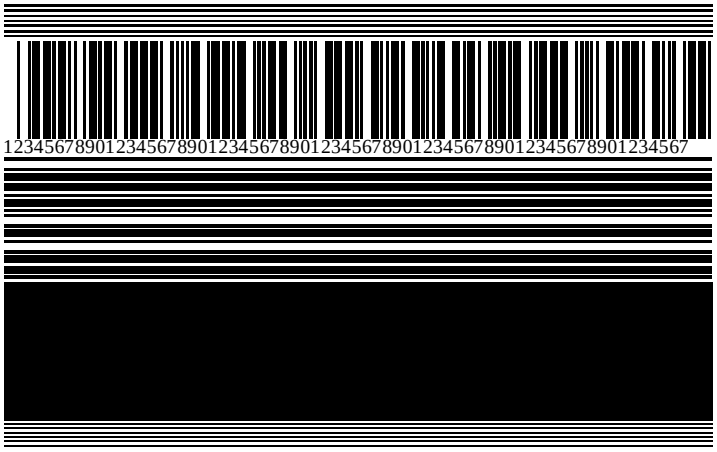


1. Turn off (O) the printer.
2. Press and hold **PAUSE** while turning on (I) the printer. Hold **PAUSE** until the first control panel light turns off.

   The initial self test prints 15 labels at the printer's slowest speed, and then automatically pauses the printer. Each time **PAUSE** is pressed, an additional 15 labels print.

   While the printer is paused:

   - Pressing **CANCEL** alters the self test. Each time **PAUSE** is pressed, 15 labels print at 152 mm (6 in.) per second.
   - Pressing **CANCEL** again alters the self test a second time. Each time **PAUSE** is pressed, 50 labels print at the printer's slowest speed.
   - Pressing **CANCEL** again alters the self test a third time. Each time **PAUSE** is pressed, 50 labels print at 152 mm (6 in.) per second.
   - Pressing **CANCEL** again alters the self test a fourth time. Each time **PAUSE** is pressed, 15 labels print at the printer's maximum speed.
3. To exit this self test at any time, press and hold **CANCEL**.

## CANCEL Self-Test

The CANCEL self test prints a printer configuration label and a network configuration label.

1. Turn off (**O**) the printer.



zebracod.ir

2. Press and hold **CANCEL** while turning on (**I**) the printer. Hold **CANCEL** until the first control panel light turns off.

   The printer prints a printer configuration label and then a network configuration label as shown in these examples.

**Figure 11** Sample Printer Configuration Label

```
PRINTER CONFIGURATION

Zebra Technologies
ZTC ZT230-203dpi ZPL
XXXXXX-XX-XXXX

10................. LCD CONTRAST
+10................ DARKNESS
2.0 IPS............ PRINT SPEED
+000............... TEAR OFF
TEAR OFF........... PRINT MODE
GAP/NOTCH.......... MEDIA TYPE
REFLECTIVE......... SENSOR SELECT
832................ PRINT WIDTH
1422............... LABEL LENGTH
................... PRINT HEAD ID
39.0IN   988MM..... MAXIMUM LENGTH
NOT CONNECTED...... USB COMM.
BIDIRECTIONAL...... PARALLEL COMM.
RS232.............. SERIAL COMM.
2400............... BAUD
8 BITS............. DATA BITS
NONE............... PARITY
XON/XOFF........... HOST HANDSHAKE
NONE............... PROTOCOL
NORMAL MODE........ COMMUNICATIONS
<~>  7EH........... CONTROL PREFIX
<^>  5EH........... FORMAT PREFIX
<,>  2CH........... DELIMITER CHAR
ZPL II............. ZPL MODE
CALIBRATION........ MEDIA POWER UP
CALIBRATION........ HEAD CLOSE
DEFAULT............ BACKFEED
+000............... LABEL TOP
+0000.............. LEFT POSITION
DISABLED........... REPRINT MODE
020................ WEB SENSOR
024................ MEDIA SENSOR
255................ TAKE LABEL
027................ MARK SENSOR
027................ MARK MED SENSOR
102................ TRANS GAIN
000................ TRANS BASE
100................ TRANS LED
050................ MARK LED
DPCSWFXM........... MODES ENABLED
................... MODES DISABLED
 832 8/MM FULL..... RESOLUTION
V72.18.1ZP15107 <-. FIRMWARE
1.3................ XML SCHEMA
6.4.1 255.......... HARDWARE ID
NONE............... OPTION BOARD
12288k............R: RAM
65536k...........E: ONBOARD FLASH
NONE............... FORMAT CONVERT
FW VERSION......... IDLE DISPLAY
07/20/12........... RTC DATE
02:37.............. RTC TIME
DISABLED........... ZBI
2.1................ ZBI VERSION
READY.............. ZBI STATUS
15,110 IN.......... NONRESET CNTR
15,110 IN.......... RESET CNTR1
15,110 IN.......... RESET CNTR2
38,378 CM.......... NONRESET CNTR
38,378 CM.......... RESET CNTR1
38,378 CM.......... RESET CNTR2
FIRMWARE IN THIS PRINTER IS COPYRIGHTED
```

**Figure 12** Sample Network Configuration Label

```
Network Configuration

Zebra Technologies
ZTC ZT230-203dpi ZPL
XXXXXX-XX-XXXX

PrintServer........ LOAD LAN FROM?
INTERNAL WIRED..... ACTIVE PRINTSRVR

Wired*
ALL................ IP PROTOCOL
010.003.005.104.... IP ADDRESS
255.255.255.000.... SUBNET
010.003.005.001.... GATEWAY
010.003.001.098.... WINS SERVER IP
YES................ TIMEOUT CHECKING
300................ TIMEOUT VALUE
000................ ARP INTERVAL
9100............... BASE RAW PORT

Wireless
ALL................ IP PROTOCOL
000.000.000.000.... IP ADDRESS
255.255.255.000.... SUBNET
000.000.000.000.... GATEWAY
000.000.000.000.... WINS SERVER IP
YES................ TIMEOUT CHECKING
300................ TIMEOUT VALUE
000................ ARP INTERVAL
9100............... BASE RAW PORT
NOT INSERTED....... CARD INSERTED
H.................. CARD MFG ID
H.................. CARD PRODUCT ID
00:00:00:00:00:00.. MAC ADDRESS
YES................ DRIVER INSTALLED
INFRASTRUCTURE..... OPERATING MODE
123456............. ESSID
100................ TX POWER
ALL................ CURRENT TX RATE
OPEN............... WEP TYPE
NONE............... WLAN SECURITY
1.................. WEP INDEX
000................ POOR SIGNAL
LONG............... PREAMBLE
NO................. ASSOCIATED
ON................. PULSE ENABLED
15................. PULSE RATE
OFF................ INTL MODE
not available...... REGION CODE
no_region code..... COUNTRY CODE
0x7FF.............. CHANNEL MASK

FIRMWARE IN THIS PRINTER IS COPYRIGHTED
```

## FEED and PAUSE Self Test

Performing this self test resets the printer configuration to the factory default values. Perform a sensor calibration after this self test.

1. Turn off (**O**) the printer.
2. Press and hold **FEED** + **PAUSE** while turning on (**I**) the printer.



zebracod.ir

3. Hold **FEED** + **PAUSE** until the first control panel light turns off.

The printer configuration is reset to the factory default values. No labels print at the end of this test.

To perform the sensor calibration required after this self test. see Calibrating the Ribbon and Media Sensors on page 122.

## CANCEL and PAUSE Self Test

Performing this self test resets the network configuration to the factory default values.

1. Turn off (**O**) the printer.
2. Press and hold **CANCEL** + **PAUSE** while turning on (**I**) the printer.
3. Hold **CANCEL** + **PAUSE** until the first control panel light turns off.

   The printer's network configuration is reset to the factory default values. No labels print at the end of this test.

## Sensor Profile

Use the sensor profile image (which will extend across several actual labels or tags) to troubleshoot the following situations:

With the printer in the Ready state, print a sensor profile in one of these ways:

- The printer experiences difficulty in determining gaps (web) between labels.
- The printer incorrectly identifies preprinted areas on a label as gaps (web).
- The printer cannot detect ribbon.

| | |
|---|---|
| Using the buttons on the control panel | **1.** Turn off (**O**) the printer.<br>**2.** Press and hold **FEED** + **CANCEL** while turning on (**I**) the printer.<br>**3.** Hold **FEED** + **CANCEL** until the first control panel light turns off. |
| Using ZPL | Send the ~JG command to the printer. See the Zebra Programming Guide for more information about this command. |
| Using the control panel display | **1.** On the control panel display, navigate to the following item under the SENSORS menu. See Idle Display, Home Menu, and User Menus on page 13 for information about using the control panel and accessing the menus.<br>PRINT INFORMATION<br>▼ SENSOR PROFILE ▲<br>PRINT<br>**2.** Press **RIGHT SELECT** to select PRINT. |



zebracod.ir

Compare your results to the examples shown in this section. If the sensitivity of the sensors must be adjusted, calibrate the printer (see Calibrating the Ribbon and Media Sensors on page 122).

### Ribbon Sensor Profile

The line labeled RIBBON (1) on the sensor profile indicates the ribbon sensor readings. The ribbon sensor threshold setting is indicated by OUT (2). If the ribbon readings are below the threshold value, the printer does not acknowledge that ribbon is loaded.

**Figure 13** Sensor Profile (Ribbon Section)

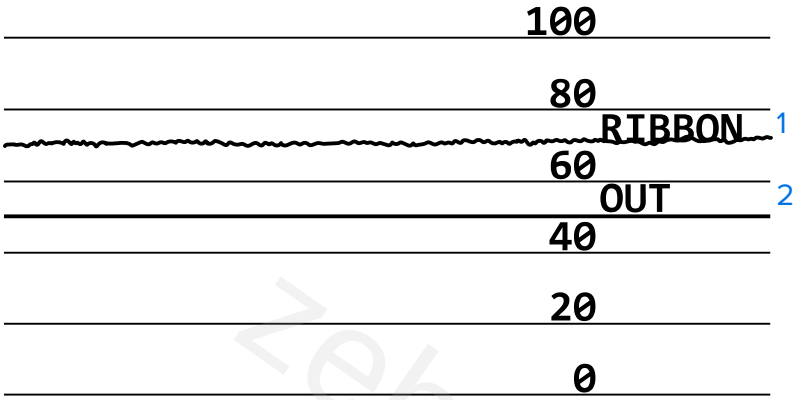


### Media Sensor Profile

The line labeled MEDIA (1) on the sensor profile indicates the media sensor readings. The media sensor threshold settings is indicated by WEB (2). The media out threshold is indicated by OUT (3). The upward or downward spikes (4) indicate divisions between labels (the web, notch, or black mark), and the lines between the spikes (5) indicate where labels are located.

If you compare the sensor profile printout to a length of your media, the spikes should be the same distance apart as the gaps on the media. If the distances are not the same, the printer may be having difficulty determining where the gaps are located.

**Figure 14** Media Sensor Profile (Gap/Notch Media)

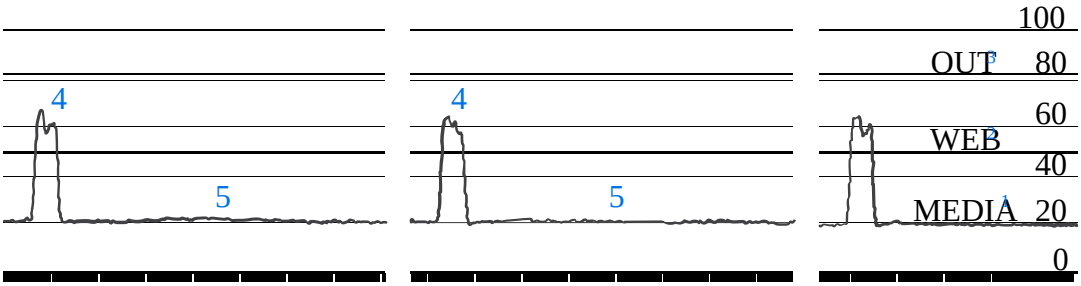




zebracod.ir

**Figure 15** Media Sensor Profile (Black Mark Media)

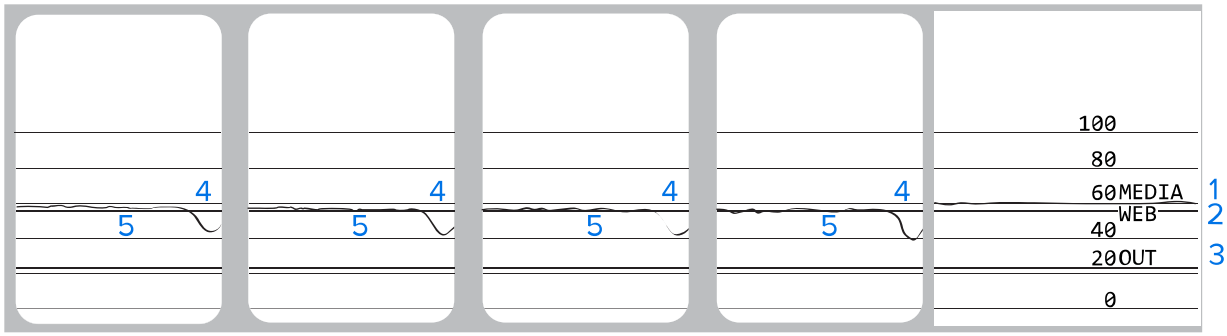


## Performing a Communication Diagnostic Test

The communication diagnostics test is a troubleshooting tool for checking the connectivity between the printer and the host computer.

When the printer is in diagnostics mode, it prints all data received from the host computer as straight ASCII characters with the hex values below the ASCII text. The printer prints all characters received, including control codes such as CR (carriage return). Here is an example of a typical test label from this test.

**Figure 16** Communications Diagnostics Test Label

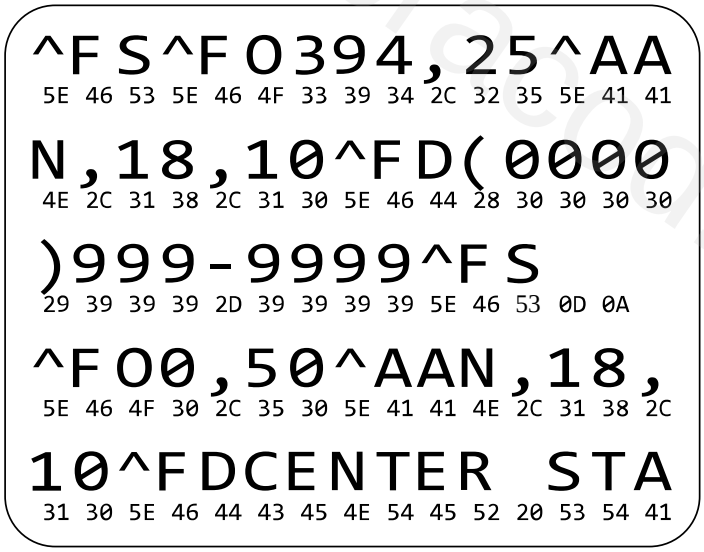


**NOTE:** The test label prints upside-down.

To use communications diagnostics mode, complete these steps:

1. Set the print width equal to or less than the label width being used for the test. See Print Width in Settings on page 74 for more information.
2. Set the **DIAGNOSTICS MODE** option to **ENABLED**. For methods, see Communication Diagnostic Mode in Calibration, Diagnostic, and Other Tools on page 82.



zebracod.ir

3. Check the test label for error codes. For any errors, check that your communication parameters are correct.
   - FE indicates a framing error.
   - OE indicates an overrun error.
   - PE indicates a parity error.
   - NE indicates noise.
4. Turn printer power off (**O**) and then back on (**I**) to exit this self test and return to normal operation.

### Loading Defaults or Last-Saved Values

Restoring the printer to default factory values can help if things are not working as expected.

The Load Defaults action can be initiated from the Tools menu. See Load Defaults in Calibration, Diagnostic, and Other Tools on page 82.

**IMPORTANT:** Use care when loading defaults because you will need to reload all settings that you changed manually, after the reset.

## Alerts and Error States

This section helps you interpret your printer's indicator light states and display messages. It also lists recommendations on how to address errors.

Troubleshooting information for your printer is also available on zebra.com:

- ZT410
- ZT420

### Indicator Lights

The indicator lights on the control panel show the current status of the printer

**Table 15** Status of Printer As Shown by Indicator Lights

| Indicator Lights | What they indicate |
|---|---|
| STATUS PAUSE DATA SUPPLIES NETWORK<br>STATUS light steady green (other lights steady yellow for 2 seconds during printer power-up). | The printer is ready. |
| STATUS PAUSE DATA SUPPLIES NETWORK<br>PAUSE light steady yellow. | The printer is paused. |



zebracod.ir

**Table 15** Status of Printer As Shown by Indicator Lights (Continued)

| Indicator Lights | What they indicate |
|---|---|
| STATUS PAUSE DATA SUPPLIES NETWORK<br>STATUS light steady red.<br>SUPPLIES light steady red. | The media supply is out. The printer needs attention and cannot continue without user intervention. |
| STATUS PAUSE DATA SUPPLIES NETWORK<br>STATUS light steady red.<br>SUPPLIES light flashing red. | The ribbon supply is out. The printer needs attention and cannot continue without user intervention. |
| STATUS PAUSE DATA SUPPLIES NETWORK<br>STATUS light steady yellow.<br>SUPPLIES light flashing yellow. | The printer is in Direct Thermal mode, which does not require ribbon; however, ribbon is installed in the printer. |
| STATUS PAUSE DATA SUPPLIES NETWORK<br>STATUS light steady red.<br>PAUSE light steady yellow. | The printhead is open. The printer needs attention and cannot continue without user intervention. |
| STATUS PAUSE DATA SUPPLIES NETWORK<br>STATUS light steady yellow. | The printhead is over temperature.<br>**CAUTION—HOT SURFACE:** The printhead may be hot and could cause severe burns. Allow the printhead to cool. |
| STATUS PAUSE DATA SUPPLIES NETWORK<br>STATUS light flashing yellow. | Indicates one of the following:<br>• The printhead is under temperature.<br>**CAUTION:** This display message can be incorrect. The printhead may be hot and could cause severe burns. Allow the printhead to cool.<br>• The main logic board (MLB) or power supply is over temperature. |
| STATUS PAUSE DATA SUPPLIES NETWORK<br>STATUS light steady red.<br>PAUSE light steady red.<br>DATA light steady red. | The printhead was replaced with one that is not a genuine Zebra printhead. Install a genuine Zebra printhead to continue. |



zebracod.ir

**Table 15** Status of Printer As Shown by Indicator Lights (Continued)

| Indicator Lights | What they indicate |
|---|---|
| STATUS PAUSE DATA SUPPLIES NETWORK<br>STATUS light flashing red. | The printer is unable to read the dpi setting of the printhead. |
| Printers with a ZebraNet wired Ethernet option | |
| STATUS PAUSE DATA SUPPLIES NETWORK<br>NETWORK light off. | No Ethernet link is available. |
| STATUS PAUSE DATA SUPPLIES NETWORK<br>NETWORK light steady green. | A 100 Base-T link was found. |
| STATUS PAUSE DATA SUPPLIES NETWORK<br>NETWORK light steady yellow. | A 10 Base-T link was found. |
| STATUS PAUSE DATA SUPPLIES NETWORK<br>NETWORK light steady red. | An Ethernet error condition exists. The printer is not connected to your network. |
| Printers with a ZebraNet wireless option | |
| STATUS PAUSE DATA SUPPLIES NETWORK<br>STATUS PAUSE DATA SUPPLIES NETWORK<br>STATUS PAUSE DATA SUPPLIES NETWORK<br>NETWORK light off.<br>The light flashes red while the printer associates with the network.<br>The light then flashes yellow while the printer is authenticating with the network. | A radio was found during power-up. The printer is attempting to associate with the network. |



zebracod.ir

**Table 15** Status of Printer As Shown by Indicator Lights (Continued)

| Indicator Lights | What they indicate |
|---|---|
| STATUS PAUSE DATA SUPPLIES NETWORK<br>NETWORK light steady green. | The radio is associated with your network and authenticated, and the WLAN signal is strong. |
| STATUS PAUSE DATA SUPPLIES NETWORK<br>NETWORK light flashing green. | The radio is associated with your network and authenticated, but the WLAN signal is weak. |
| STATUS PAUSE DATA SUPPLIES NETWORK<br>NETWORK light steady red. | A WLAN error condition exists. The printer is not connected to your network. |

## Error Messages

The printer's control panel displays messages when there is an error. See Error Message Lookup on page 164 for information that will help you interpret and troubleshoot an error.

### QuickHelp Pages

Most error messages will include the option to view a QuickHelp page. The lower right-hand corner of the message displays QR.

To access a QuickHelp page from an error message:

1. Press **RIGHT SELECT** to select **QR**.

   The printer displays a QuickHelp page specific to that error message. This page includes a QR code, such as this.

2. Scan the QR code with a smartphone.

   Your phone accesses either a video specific to that error message or the Zebra support page for your printer.



zebracod.ir

## Error Message Lookup

Review the display or indicator lights, review the possible causes, and implement a recommended solution.

| Display/Indicator Lights | Possible Cause | Recommended Solution |
|---|---|---|
| **HEAD OPEN**<br>**CLOSE HEAD**<br>STATUS light steady red<br>PAUSE light steady yellow | The printhead is not fully closed. | Close the printhead completely. |
| | The printhead open sensor is not working properly. | Call a service technician to replace the sensor. |
| **MEDIA OUT**<br>**LOAD MEDIA**<br>STATUS light steady red<br>SUPPLIES light steady red | The media is not loaded or is loaded incorrectly. | Load media correctly. |
| | Misaligned media sensor. | Check the position of the media sensor. |
| | The printer is set for non-continuous media, but continuous media is loaded. | Install the proper media type, or reset printer for the current media type.<br>Calibrate the printer.<br>See Calibrating the Ribbon and Media Sensors on page 122. |
| **WARNING**<br>**RIBBON IN**<br>STATUS light steady yellow<br>SUPPLIES light flashing yellow | Ribbon is loaded, but the printer is set for direct thermal mode. | Ribbon is not required with direct thermal media. If you are using direct thermal media, remove the ribbon. This error message will not affect printing. |
| | | If you are using thermal transfer media, which requires ribbon, set the printer for Thermal Transfer mode. See Print Method in Settings. |
| **ALERT**<br>**RIBBON OUT**<br>STATUS light steady red<br>SUPPLIES light flashing yellow | In thermal transfer mode:<br>• ribbon is not loaded<br>• ribbon is loaded incorrectly<br>• the ribbon sensor is not detecting ribbon<br>• media is blocking the ribbon sensor | Load ribbon correctly. See Loading the Ribbon on page 64.Calibrate the printer. See Calibrating the Ribbon and Media Sensors on page 122. |



zebracod.ir

| Display/Indicator Lights | Possible Cause | Recommended Solution |
|---|---|---|
| | In Thermal Transfer mode, the printer did not detect the ribbon even though it is loaded correctly. | Print a sensor profile (see Print Information in Settings on page 74). The ribbon out threshold (2) is likely too high, above the line that indicates where the ribbon is detected (1).<br> 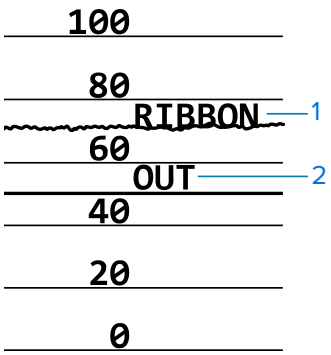 <br><br>Calibrate the printer (see Calibrating the Ribbon and Media Sensors on page 122) or load printer defaults (see Load Defaults in Tools Settings). |
| | If you are using direct thermal media, the printer is waiting for ribbon to be loaded because it is incorrectly set for Thermal Transfer mode. | Set the printer for Direct Thermal mode. See Print Method in Settings. |
| **PH NOT AUTHENTICATED<br>REPLACE PRINT HEAD**<br>STATUS light steady red<br>PAUSE light steady red<br>DATA light steady red | The printhead was replaced with one that is not a genuine Zebra printhead. | Install a genuine Zebra printhead. |



zebracod.ir

| Display/Indicator Lights | Possible Cause | Recommended Solution |
|---|---|---|
| **PRINT HEAD OVERTEMP PRINTING HALTED**<br><br>STATUS light steady yellow | The printhead is over temperature. | **CAUTION—HOT SURFACE:** The printhead may be hot and could cause severe burns. Allow the printhead to cool.<br><br>Allow the printer to cool. Printing automatically resumes when the printhead elements cool to an acceptable operating temperature.<br><br>If this error persists, consider changing where the printer is located or using a slower print speed. |
| **HEAD COLD PRINTING HALTED**<br><br>**THERMISTOR REPLACE PRINTHEAD**<br><br>STATUS light steady yellow<br><br>The printer shows one of the messages show here or it cycles between them. | **CAUTION:** An improperly connected printhead data or power cable can cause these error messages.<br><br>**CAUTION—HOT SURFACE:** The printhead may be hot and could cause severe burns. Allow the printhead to cool. | |
| | The printhead data cable is not properly connected. | Call a service technician to hook up the printhead properly. |
| | The printhead has a faulty thermistor. | Call a service technician to replace the printhead. |
| **HEAD COLD PRINTING HALTED**<br><br>STATUS light flashing yellow | **CAUTION:** An improperly connected printhead data or power cable can cause this error message. The printhead may be hot enough to cause severe burns. Allow the printhead to cool. | |
| | The printhead temperature is approaching its lower operating limit. | Continue printing while the printhead reaches the correct operating temperature. If the error remains, the environment may be too cold for proper printing. Relocate the printer to a warmer area. |
| | The printhead data cable is not properly connected. | Call a service technician to hook up the printhead properly. |
| | The printhead has a faulty thermistor. | Call a service technician to replace the printhead. |



zebracod.ir

| Display/Indicator Lights | Possible Cause | Recommended Solution |
|---|---|---|
| CUT ERROR<br><br>STATUS light steady red<br>PAUSE light steady yellow | **CAUTION:** The cutter blade is sharp. Do not touch or rub the blade with your fingers. | |
| | The cutter blade is in the media path. | Turn off printer power and unplug the printer. Inspect the cutter module for debris and clean as needed following the cleaning instructions in Cleaning and Lubricating the Cutter Module on page 143. |
| USE USB MEMORY DEVICE?<br>YES NO | The USB host port is disabled, and a USB device was plugged into the port. | To use the USB device, select YES, or send the following SGD command to the printer:<br>`! U1 setvar "usb.host.lock_out" "on"` |
| OUT OF MEMORY STORING GRAPHIC<br><br>OUT OF MEMORY STORING FORMAT<br><br>OUT OF MEMORY STORING BITMAP<br><br>HEAD COLD PRINTING FONT | There is not enough memory to perform the function specified on the second line of the error message. | Free up some of the printer's memory by adjusting the label format or printer parameters. One way to free up memory is to adjust the print width to the actual width of the label instead of leaving the print width set to the default. See Print Width in Settings. |
| | | Ensure that the data is not directed to a device that is not installed or is unavailable. |
| | | If the problem persists, call a service technician. |

## Troubleshooting

Use this information to troubleshoot issues with the printer.

### Printing Issues

This table identifies possible issues with printing or print quality, the possible causes, and the recommended solutions.

For videos and additional online information designed to assist you, see these pages on zebra.com:

- ZT410
- ZT420



zebracod.ir

| Issue | Possible Cause | Recommended Solution |
|---|---|---|
| General print quality issues | The printer is set at the incorrect print speed. | For optimal print quality, set the print speed to the lowest possible setting for your application via control panel, the driver, or the software. You may want to perform the Evaluating Barcode Quality on page 151 to determine the optimal settings for your printer.<br>See Print Speed in Settings for how to change the print speed. |
| | You are using an incorrect combination of labels and ribbon for your application. | Switch to a different type of media or ribbon to try to find a compatible combination. If necessary, consult your authorized Zebra reseller or distributor for information and advice. |
| | The printer is set at an incorrect darkness level. | For optimal print quality, set the darkness to the lowest possible setting for your application. You may want to perform the Evaluating Barcode Quality on page 151 to determine the ideal darkness setting.<br>See Print Darkness in Settings for how to change the darkness setting. |
| | The printhead is dirty. | Clean the printhead and platen roller. See Cleaning the Printhead and Platen Roller on page 136. |
| | Incorrect or uneven printhead pressure. | Set the printhead pressure to the minimum needed for good print quality. See Adjusting the Printhead Pressure on page 129. |
| Loss of printing registration on labels. Excessive vertical drift in top-of-form registration. | The platen roller is dirty. | Clean the printhead and platen roller. See Cleaning the Printhead and Platen Roller on page 136. |
| | Media guides are positioned improperly. | Ensure that the media guides are properly positioned. See Loading the Media on page 35. |
| | The media type is set incorrectly. | Set the printer for the correct media type (gap/notch, continuous, or mark). |
| | The media is loaded incorrectly. | Load media correctly. See Loading the Media on page 35. |
| Long tracks of missing print on several labels | Print element damaged. | Call a service technician. |
| | Wrinkled ribbon. | See wrinkled ribbon causes and solutions in Ribbon Issues on page 170. |
| Fine, angular gray lines on blank labels | Wrinkled ribbon. | See wrinkled ribbon causes and solutions in Ribbon Issues on page 170. |



zebracod.ir

| Issue | Possible Cause | Recommended Solution |
|---|---|---|
| Printing too light or too dark over the entire label | The media or ribbon is not designed for high-speed operation. | Replace supplies with those recommended for high-speed operation. Procure the recommended supplies from zebra.com/supplies. |
| | You are using an incorrect combination of media and ribbon for your application. | Switch to a different type of media or ribbon to try to find a compatible combination. If necessary, consult your authorized Zebra reseller or distributor for information and advice. |
| | You are using ribbon with direct thermal media. | Direct thermal media does not require ribbon. To determine if you are using direct thermal media, perform the label scratch test. See 'How can I tell which side of the ribbon is coated?' inRibbon on page 16. |
| | Incorrect or uneven printhead pressure. | Set the printhead pressure to the minimum needed for good print quality. See Adjusting the Printhead Pressure on page 129. |
| Printing too light or too dark on one side of the label | ncorrect or uneven printhead pressure. | Adjust the printhead pressure as needed for good print quality. See Adjusting the Printhead Pressure on page 129. |
| Smudge marks on labels | The media or ribbon is not designed for high-speed operation. | Replace supplies with those recommended for high-speed operation. |
| Misregistration/skips labels | The printer is not calibrated. | Calibrate the printer. See Calibrating the Ribbon and Media Sensors on page 122. |
| | Improper label format. | Check your label format and correct it as necessary. |
| Misregistration and misprint of one to three labels | The platen roller is dirty. | Clean the printhead and platen roller. See Cleaning the Printhead and Platen Roller on page 136. |
| | Media does not meet specifications. | Use media that meets specifications. See Media Specifications on page 195. |
| Vertical drift in top-of-form position | The printer is out of calibration. | Calibrate the printer. See Calibrating the Ribbon and Media Sensors on page 122. |
| | The platen roller is dirty. | Clean the printhead and platen roller. See Cleaning the Printhead and Platen Roller on page 136. |
| Vertical image or label drift | The printer is using non-continuous labels but is configured in continuous mode. | Set the printer for the correct media type (gap/notch, continuous, or mark) and calibrate the printer, if necessary (see Calibrating the Ribbon and Media Sensors on page 122). |
| | The media sensor is calibrated improperly. | Calibrate the printer. See Calibrating the Ribbon and Media Sensors on page 122. |



zebracod.ir

| Issue | Possible Cause | Recommended Solution |
|---|---|---|
| | The platen roller is dirty. | Clean the printhead and platen roller. See Calibrating the Ribbon and Media Sensors on page 122. |
| | Improper printhead pressure settings (toggles). | Adjust the printhead pressure to ensure proper functionality. See Adjusting the Printhead Pressure on page 129. |
| | The media or ribbon is loaded incorrectly. | Ensure that the media and ribbon are loaded correctly. See Loading the Ribbon on page 64 and Loading the Media on page 35. |
| | Incompatible media. | You must use media that meets the printer specifications. Ensure that the inter-label gaps or notches are 2 to 4 mm and consistently placed (see Media Specifications on page 195). |
| The bar code printed on a label does not scan. | The bar code is not within specifications because the print is too light or too dark. | Check the quality of the printed bar codes. See Evaluating Barcode Quality on page 151. Adjust the darkness or print speed settings as necessary. |
| | There is not enough blank space around the bar code. | Leave at least 1/8 in. (3.2 mm) between the bar code and other printed areas on the label and between the bar code and the edge of the label. |
| Auto Calibrate failed. | The media or ribbon is loaded incorrectly. | Ensure that the media and ribbon are loaded correctly. See Loading the Ribbon on page 64 and Loading the Media on page 35. |
| | The sensors could not detect the media or ribbon. | Calibrate the printer. See Media Specifications on page 195. |
| | The sensors are dirty or positioned improperly. | Ensure that the sensors are clean and properly positioned. |
| | The media type is set incorrectly. | Set the printer for the correct media type (gap/notch, continuous, or mark). |

## Ribbon Issues

Use this information to assess problems that may occur with ribbon, the possible causes, and the recommended solutions.

| Problem | Possible Cause | Recommended Solution |
|---|---|---|
| Broken or melted ribbon | Darkness setting too high. | Reduce the darkness setting. See Print Darkness in Settings for information on changing the darkness setting. Clean the printhead thoroughly. See Cleaning the Printhead and Platen Roller on page 136. |



zebracod.ir

| Problem | Possible Cause | Recommended Solution |
|---|---|---|
| | The ribbon is coated on the wrong side and cannot be used in this printer. | Replace the ribbon with one coated on the correct side. For more information, see 'What Kind of Ribbon Can I Use" in Ribbon on page 16. |
| Wrinkled ribbon | Ribbon was loaded incorrectly. | Load the ribbon correctly. See Loading the Ribbon on page 64. |
| | Incorrect burn temperature. | For optimal print quality, set the darkness to the lowest possible setting for your application. You may want to assess barcode quality (see Evaluating Barcode Quality on page 151) to determine the ideal darkness setting.<br>See Print Darkness in Settings for information on changing the darkness setting. |
| | Incorrect or uneven printhead pressure. | Set the printhead pressure to the minimum needed for good print quality. See Adjusting the Printhead Pressure on page 129. |
| | Media not feeding properly; “walking” from side to side. | Make sure that media is snug by adjusting the media guide, or call a service technician. |
| | The printhead or platen roller may be installed incorrectly. | Call a service technician. |
| The printer does not detect when the ribbon runs out. | The printer may have been calibrated without ribbon or without the ribbon loaded properly | Make sure that ribbon is loaded correctly so that it can be detected by the ribbon sensor. Under the printhead, the ribbon should track all the way back, near the printer’s firewall. See Loading the Ribbon on page 64<br>Calibrate the printer. See Calibrating the Ribbon and Media Sensors on page 122. |
| In thermal transfer mode, the printer did not detect the ribbon even though it is loaded correctly. | | |
| The printer indicates that ribbon is out, even though ribbon is loaded correctly. | The printer was not calibrated for the label and ribbon being used. | Calibrate the printer. See Calibrating the Ribbon and Media Sensors on page 122. |

## RFID Issues

| Issue | Possible Cause | Recommended Solution |
|---|---|---|
| Printer Stops at RFID Inlay | | |



zebracod.ir

| Issue | Possible Cause | Recommended Solution |
|---|---|---|
| The printer stops at the RFID inlay. | The printer calibrated the label length only to the RFID inlay instead of to the inter-label gap. | **1.** Select **FEED** for the Media Power Up and Head Close parameters as appropriate. See Power-Up Action or Head-Close Action in Calibration, Diagnostic, and Other Tools on page 82.<br>**2.** Manually calibrate the printer. See Calibrating the Ribbon and Media Sensors on page 122. |
| Voided Labels | | |
| When RFID is enabled, the printer voids every label. | The printer is not calibrated for the media being used. | Manually calibrate the printer. See Performing Manual Sensor Calibration on page 123. |
| | You are using an RFID label with a tag type that is not supported by your printer. | These printers support only Gen 2 RFID labels. For more information, refer to RFID Programming Guide 3, or contact an authorized Zebra RFID reseller. |
| | The printer is unable to communicate with the RFID reader. | **1.** Turn off (**O**) the printer.<br>**2.** Wait 10 seconds.<br>**3.** Turn on (**I**) the printer.<br>**4.** If the problem persists, you may have a bad RFID reader or a loose connection between the RFID reader and the printer. Contact Technical Support or an authorized Zebra RFID service technician for assistance. |
| | Radio frequency (RF) interference from another RF source. | Do one or more of the following as necessary:<br>• Move the printer away from fixed RFID readers or other RF sources.<br>• Make sure that the media door is closed at all times during RFID programming. |
| | The settings are incorrect in your label designer software. | The software settings override the printer settings. Make sure that the software and printer settings match. |



zebracod.ir

| Issue | Possible Cause | Recommended Solution |
|---|---|---|
| | You are using an incorrect programming position, particularly if the tags being used are within printer specifications. | Do one or more of the following as necessary:<br>• Check the RFID programming position or the program position setting in your label designer software. If the position is incorrect, change the setting.<br>• Restore the RFID programming position back to the default value.<br>For more information, refer to RFID Programming Guide 3. For transponder placement details, go to zebra.com/transponders. |
| | You are sending RFID ZPL or SGD commands that are incorrect. | Check your label formats. For more information, refer to RFID Programming Guide 3. |
| Low yields. Too many RFID tags per roll are voided. | The RFID labels are not within specifications for the printer, which means that the transponder is not in an area that can be programmed consistently. | Make sure that the labels meet transponder placement specifications for your printer. See zebra.com/transponders for transponder placement information.<br>For more information, refer to RFID Programming Guide 3, or contact an authorized Zebra RFID reseller. |
| | Incorrect read and write power levels. | Change the RFID read and write power levels. For instructions, refer to RFID Programming Guide 3. |
| | Radio frequency (RF) interference from another RF source. | Do one or more of the following as necessary:<br>• Move the printer away from fixed RFID readers.<br>• Make sure that the media door is closed at all times during RFID programming. |
| | The printer is using outdated printer firmware and reader firmware versions. | Go to zebra.com/firmware for updated firmware. |
| Other RFID Issues | | |



zebracod.ir

| Issue | Possible Cause | Recommended Solution |
|---|---|---|
| RFID parameters do not appear in Setup mode, and RFID information does not appear on the printer configuration label.<br>The printer does not void RFID labels that are not programmed correctly. | The printer was powered off (**O**) and then back on (**I**) too quickly for the RFID reader to initialize properly. | Wait at least 10 seconds after turning the printer power off before turning it back on.<br>**1.** Turn off (**O**) the printer.<br>**2.** Wait 10 seconds.<br>**3.** Turn on (**I**) the printer.<br>**4.** Check for the RFID parameters in Setup mode or for RFID information on a new configuration label. |
| | An incorrect version of printer firmware was loaded on the printer. | **1.** Verify that the correct firmware version is loaded on your printer. For more information, refer to RFID Programming Guide 3.<br>**2.** Download the correct printer firmware if necessary.<br>**3.** If the problem persists, contact Technical Support. |
| | The printer is unable to communicate with the RFID subsystem. | **1.** Turn off (**O**) the printer.<br>**2.** Wait 10 seconds.<br>**3.** Turn on (**I**) the printer.<br>**4.** If the problem persists, you may have a bad RFID reader or a loose connection between the RFID reader and the printer. Contact Technical Support or an authorized service technician for assistance. |
| The DATA light flashes indefinitely after you attempt to download printer or reader firmware. | The download was not successful. For optimal results, cycle power on the printer before downloading any firmware. | **1.** Turn off (**O**) the printer.<br>**2.** Wait 10 seconds.<br>**3.** Turn on (**I**) the printer.<br>**4.** Attempt to download the firmware again.<br>**5.** If the problem persists, contact Technical Support. |

zebracod.ir



zebracod.ir

## Communication Problems

Use this information to identify communication problems, the possible causes, and the recommended solutions.

| Problem | Possible Cause | Recommended Solution |
|---|---|---|
| A label format was sent to the printer but was not recognized. The DATA light does not flash. | The communication parameters are incorrect. | Check the printer driver or software communications settings (if applicable). |
| | | If you are using serial communication, check the serial port settings. See Port Settings on page 116. |
| | | If you are using serial communication, make sure that you are using a null modem cable or a null modem adapter. |
| | | Check the printer's handshake protocol setting. The setting used must match the one being used by the host computer. See Port Settings on page 116. |
| | | If a printer driver is used, check the driver communication settings for your connection.<br>Reinstall the printer driver. See Installing the Drivers on page 18. |
| A label format was sent to the printer. Several labels print, then the printer skips, misplaces, misses, or distorts the image on the label. | The serial communication settings are incorrect. | Ensure that the flow control settings match. |
| | | Check the communication cable length. See General Specifications on page 189 for requirements. |
| | | Check the printer driver or software communications settings (if applicable). |
| A label format was sent to the printer but was not recognized. The DATA light flashes but no printing occurs. | The prefix and delimiter characters set in the printer do not match the ones in the label format. | Verify the prefix and delimiter characters. See Control Character and Delimiter Character in Language Settings. |
| | Incorrect data is being sent to the printer. | Check the communication settings on the computer. Ensure that they match the printer settings. |
| | | If the problem continues, check the label format. |

## Miscellaneous Issues

Use this information to identify miscellaneous issues with the printer, the possible causes, and the recommended solutions.

For videos and additional online information designed to assist you, see these pages on zebra.com:

- ZT410
- ZT420



zebracod.ir

| Issue | Possible Cause | Recommended Solution |
|---|---|---|
| Issues with the Display | | |
| The control panel display shows a language that I cannot read | The language parameter was changed through the control panel or a firmware command. | **1.** On the control panel display, scroll through the language selections under this menu option.<br>**2.** Press **OK** to access the items in this menu.<br>**3.** Use the **UP ARROW** or **DOWN ARROW** to scroll through the language selections.<br>**4.** Select the language that you want to display. |
| The display is missing characters or parts of characters | The display may need replacing. | Call a service technician. |
| Printer Parameters Are Not Set As Expected | | |
| Changes in parameter settings did not take effect.<br>OR<br>Some parameters changed unexpectedly. | Some parameters are set incorrectly. | **1.** Check the parameters and change or reset if necessary.<br>**2.** Turn printer power off (**O**) and then on (**I**). |
| | A firmware setting or command prevented the ability to change the parameter. | Check your label formats or the settings of the software that you use to send formats to the printer.<br>If necessary, refer to the Programming Guide for ZPL, ZBI, Set-Get-Do, Mirror, and WML or call a service technician. A copy of the manual is available at zebra.com/manuals. |
| | A command in a label format changed the parameter back to the previous setting. | |
| | If the problem persists, there may be a problem with the main logic board. | Call a service technician. |
| The USB Host Port Is Not Acknowledging a USB Device | | |
| The printer is not acknowledging a USB device or is not reading the files on a USB device that is plugged into the USB host port. | The printer currently supports USB drives only up to 1 TB in size. | Use a USB drive that is 1 TB or smaller. |
| | The USB device may require its own external power. | If your USB device requires external power, make sure that it is plugged into a working power supply. |
| IP Address Changing | | |



zebracod.ir

| Issue | Possible Cause | Recommended Solution |
|---|---|---|
| My printer reassigns a new IP address to the print server after the printer has been off for a while. | The settings for your network are causing the network to reassign a new IP address. | If the printer changing IP addresses causes issues for you, follow these steps to assign it a static IP address:<br>**1.** Find out what values need to be assigned to the IP address, subnet mask, and gateway for your print server (wired, wireless, or both).<br>**2.** Change the appropriate IP protocol value to PERMANENT.<br>**3.** Change the values for the IP address, subnet mask, and gateway for the appropriate print server to what you want them to remain.<br>**4.** Reset the network by navigating to **Menu** > **Connections** > **Networks** > **Reset Network** and then press **OK** to save the changes. |
| Cannot Connect through Wired or Wireless Connections | | |
| I manually entered a wireless IP address, subnet, and gateway on my printer, but it won't connect to my wired or wireless network. | The printer's network must be reset after values are changed. | Reset the network by navigating to**Menu** > **Connections** > **Networks** > **Reset Network** and then press **OK** to save the changes. |
| | An ESSID value has not been specified. | **1.** For a wireless connection, specify the ESSID value that matches the value used by your wireless router using the following Set/Get/Do command:<br>`! U1 setvar "wlan.essid" "value"`<br>where "value" is the ESSID (sometimes called a network SSID) for your router. You can look on the back of your router for a sticker with the router's default information.<br>**NOTE:** If the information has been changed from the default, check with your network administrator for the ESSID value to use.<br>**2.** If the printer still does not connect, reset the network by touching **Menu** > **Connections** > **Networks** > **Reset Network** and then touching the checkmark to save the changes, and then power-cycle the printer. |



zebracod.ir

| Issue | Possible Cause | Recommended Solution |
|---|---|---|
| | The ESSID or other value was not specified correctly. | **1.** Print a network configuration label and verify that your values are correct.<br>**2.** Make corrections as necessary.<br>**3.** Reset the network by accessing **Menu** > **Connections** > **Networks** > **Reset Network** and then pressing **OK** to save the changes. |
| Calibration Issues | | |
| Auto Calibrate failed. | The media or ribbon is loaded incorrectly. | Ensure that the media and ribbon are loaded correctly. See Loading the Ribbon on page 64 and Loading the Media on page 35. |
| | The sensors could not detect the media or ribbon. | Calibrate the printer. See Calibrating the Ribbon and Media Sensors on page 122. |
| | The sensors are dirty or positioned improperly. | Ensure that the sensors are clean and properly positioned. |
| | The media type is set incorrectly. | Set the printer for the correct media type (gap/notch, continuous, or mark). |
| Non-continuous labels are being treated as continuous labels. | The printer was not calibrated for the media being used. | Calibrate the printer. See Calibrating the Ribbon and Media Sensors on page 122. |
| | The printer is configured for continuous media. | Set the printer for the correct media type (gap/notch, continuous, or mark). |
| Printer Locks Up | | |
| All indicator lights are on, nothing is on the display, and the printer locks up. | Internal electronic or firmware failure. | Power cycle the printer.<br>If the problem persists, call a service technician. |
| The printer locks up while booting up. | Main logic board failure. | |

## Servicing the Printer

If you have a problem using the printer, contact your facility's technical or systems support. If there is a problem with the printer, they will contact the Zebra Global Customer Support Center at zebra.com/support.

Gather the following information before contacting Zebra Global Customer Support:

- Serial number of the unit
- Model number or product name
- Firmware version number

Zebra responds to calls by e-mail, telephone, or fax within the time limits set forth in service agreements. If your problem cannot be solved by Zebra Global Customer Support, you may need to return your equipment for servicing and will be given specific directions.



zebracod.ir

If you purchased your product from a Zebra business partner, please contact that business partner for support.

## Shipping the Printer

If you must ship the printer:

1. Turn off (**O**) the printer, and disconnect all cables.
2. Remove any media, ribbon, or loose objects from the printer interior.
3. Close the printhead.
4. Carefully pack the printer into the original container or a suitable alternate container to avoid damage during transit.

   A shipping container can be purchased from Zebra if the original packaging has been lost or destroyed.

**IMPORTANT:** Zebra is not responsible for any damages incurred during shipment if an approved shipping container is not used. Shipping the units improperly can possibly void the warranty.

zebracod.ir



zebracod.ir

# Using a USB Host Port and the Print Touch Feature

The exercises presented here will help you learn how to use a USB host port and the printer's Print Touch feature with an Android™-based NFC-enabled device (such as a smartphone or a tablet).

Some SGD commands are listed as part of these exercises for advanced users.

## Items Required for the Exercises

To perform the exercises in this document, you will need:

- a USB Flash drive that is up to 1 Terabyte (1 TB)

**NOTE:** The printer will not recognize drives larger than 1 TB.

- a USB keyboard
- the various files listed in Files for Completing the Exercises on page 181
- the free Zebra Utilities app for your smartphone (search for Zebra Technologies in the Google Play store)



zebracod.ir

## Files for Completing the Exercises

Most of the files you need to complete the exercises in these section are available on zebra.com in the form of a .ZIP file located here. Copy these files to your computer before you begin the exercises. Where possible, the contents of the files are shown. Contents of files that include coded content—which cannot be viewed either as text or as an image—are not included.

**File 1: ZEBRA.BMP**

**File 2: SAMPLELABEL.TXT**

This simple label format prints the Zebra logo and a line of text at the end of the mirroring exercise.

```
^XA
^FO100,75^XGE:zebra.bmp^FS
^FO100,475^A0N,50,50^FDMirror from USB Completed^FS
^XZ
```

**File 3: LOGO.ZPL**

**File 4: USBSTOREDFILE.ZPL**

This label format prints an image and text. This file will be stored on the USB memory device at the root level so that it can be printed.

```
CT~~CD,~CC^~CT~
^XA~TA012~JSN^LT0^LH0,0^JMA^PR4,4~SD15^LRN^CI0^XZ
~DG000.GRF,07680,024,,[image data]
^XA
^LS0
^SL0
^BY3,3,91^FT35,250^BCN,,Y,N^FC%,{,#^FD%d/%m/%Y^FS
^FT608,325^XG000.GRF,1,1^FS
^FT26,75^A0N,28,28^FH\^FDThis label was printed from a format stored^FS
^FT26,125^A0N,28,28^FH\^FDon a USB Flash Memory drive. ^FS
^BY3,3,90^FT33,425^BCN,,Y,N
^FD>:Zebra Technologies^FS
^PQ1,0,1,Y^XZ
^XA^ID000.GRF^FS^XZ
```

**File 5: VLS_BONKGRF.ZPL**

This file is included in the .ZIP file located here.

**File 6: VLS_EIFFEL.ZPL**

This file is included in the .ZIP file located here.



zebracod.ir

**File 7: KEYBOARDINPUT.ZPL**

This label format, used for the USB keyboard input exercise, does the following:

- creates a barcode with the current date, based on your Real-Time Clock (RTC) setting
- prints the Zebra logo graphic
- prints fixed text
- ^FN prompts you to enter your name, and the printer prints what you entered

```
^XA
^CI28
^BY2,3,91^FT38,184^BCN,,Y,N^FC%,{,#^FD%d/%m/%Y^FS
^FO385,75^XGE:zebra.bmp^FS
^FT40,70^A0N,28,28^FH\^FDThis label was printed using a keyboard input. ^FS
^FT35,260^A0N,28,28^FH\^FDThis label was printed by:^FS
^FT33,319^A0N,28,28^FN1"Enter Name"^FS
^XZ
```

**File 8: SMARTDEVINPUT.ZPL**

This is the same label format as the previous label, only with different text printing. This format is used for the smart device input exercise.

```
^XA
^CI28
^BY2,3,91^FT38,184^BCN,,Y,N^FC%,{,#^FD%d/%m/%Y^FS
^FO385,75^XGE:zebra.bmp^FS
^FT40,70^A0N,28,28^FH\^FDThis label was printed using a smart device input.
 ^FS
^FT35,260^A0N,28,28^FH\^FDThis label was printed by:^FS
^FT33,319^A0N,28,28^FN1"Enter Name"^FS
^XZ
```

**File 9: Firmware File**

You may want to download a firmware file for your printer and copy it to your computer for use during the exercises. You may omit doing this if you wish.

You can download the latest firmware file from zebra.com/firmware.



zebracod.ir

# USB Host

Your printer may be equipped with one or two USB host ports on the front panel. A USB host port allows you to connect USB devices—such as a keyboard, scanner, or USB Flash drive—to the printer. The exercises in this section will teach you how to perform USB mirror, how to transfer files to and from the printer, and how to provide information for which you are prompted and then print a label using that information.

**IMPORTANT:** When using a USB host port, files should be named only with 1 to 16 alphanumeric characters (A, a, B, b, C, c, ..., 0, 1, 2, 3, ...). Do not use Asian characters, Cyrillic characters, or accented characters in file names.

**NOTE:** Some functions may not work properly if there are underscores in a file name. Use periods instead.

## Exercise 1: Copy Files to a USB Flash Drive and Perform USB Mirror

1. On your USB Flash Drive, create the following:

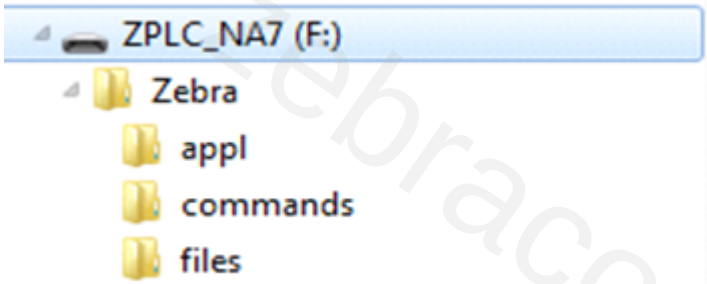


   - a folder called `Zebra`
   - in that folder, three subfolders:
     - `appl`
     - `commands`
     - `files`
2. In the `/appl` folder, place a copy of the latest firmware for your printer.
3. In the `/files` folder, place the following file:

   File 1: ZEBRA.BMP on page 181
4. In the `/commands` folder, place the following files:
   - File 2: SAMPLELABEL.TXT on page 181
   - File 3: LOGO.ZPL on page 181
5. Insert the USB Flash drive into a USB host port on the front of your printer.
6. Observe the control panel and wait.

   The following should happen:
   - If the firmware on the USB Flash drive is different than what is on the printer, the firmware downloads to the printer. The printer then restarts and prints a printer configuration label. (If there



zebracod.ir

is no firmware on the USB Flash drive or if the firmware version is the same, the printer skips this action.)

- The printer downloads the files in the `/files` folder and briefly shows the names of the files that are downloading on the display.
- The printer executes any files in the `/commands` folder.
- The printer restarts and then displays this message: `MIRROR PROCESSING FINISHED`

7. Remove the USB Flash drive from the printer.

| Advance User Information | |
|---|---|
| See the Zebra Programming Guide for more information about these commands. | |
| To enable/disable mirroring: | `! U1 setvar "usb.mirror.enable" "value"`<br>Values: `"on"` or `"off"` |
| To enable/disable automatic mirroring that occurs when a USB Flash drive is inserted into the USB host port: | `! U1 setvar "usb.mirror.auto" "value"`<br>Values: `"on"` or `"off"` |
| To specify the number of times that the mirror operation will be repeated if it fails: | `! U1 setvar "usb.mirror.error_retry" "value"`<br>Values: `0` to `65535` |
| To change the path to the location on the USB device from which mirror files are retrieved: | `! U1 setvar "usb.mirror.appl_path" "new_path"`<br>Default: `"zebra/appl"` |
| To change the path to the location on the printer from which mirror files are retrieved: | `! U1 setvar "usb.host.lock_out" "value"`<br>Default: `"zebra"` |
| To enable/disable the ability to use the USB port: | `! U1 setvar "usb.host.lock_out" "value"`<br>Values: `"on"` or `"off"` |

## Exercise 2: Print a Label Format from a USB Flash Drive

The Print USB File option allows you to print files from a USB mass storage device, such as a USB Flash drive. Only printable files (`.ZPL` and `.XML`) may be printed from the USB mass storage device, and the files must be located at the root level, not in a directory.

1. Copy the following files to your USB Flash drive:
   - `File 4: USBSTOREDFILE.ZPL` on page 181
   - `File 5: VLS_BONKGRF.ZPL` on page 181
   - `File 6: VLS_EIFFEL.ZPL` on page 181
2. Insert the USB Flash drive into a USB host port on the front of your printer.
3. On the printer's control panel, press **LEFT SELECT** (below the home icon) to access the printer's Home Menu ( ).
4. Use the **ARROW** buttons to scroll to the Tools menu. ( ).



zebracod.ir

5. Press **OK**.
6. Use the **ARROW** buttons to scroll to `PRINT USB FILE`.

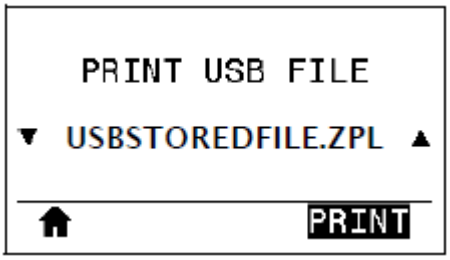


The printer loads any executable files and processes them. The available files are listed. **SELECT ALL** is available to print all files on the USB Flash drive.

7. If necessary, use the **UP ARROW** or **DOWN ARROW** to select `USBSTOREDFILE.zpl`.
8. Press**RIGHT SELECT** to select **PRINT**.

   The label prints.

## Exercise 3: Copy Files to/from a USB Flash Drive

The Copy USB File option allows you to copy files from a USB mass storage device to the printer's Flash memory E: drive.

1. Copy the following files to the root directory of your USB Flash drive.
   - `File 7: KEYBOARDINPUT.ZPL` on page 182
   - `File 8: SMARTDEVINPUT.ZPL` on page 182

**NOTE:** Do not put these files into a subfolder.

2. Insert the USB Flash drive into a USB host port on the front of your printer.
3. On the printer's control panel, press **LEFT SELECT** to access the printer's Home Menu ( ).
4. Use the **ARROW** buttons to scroll to the Tools menu. ( )
5. Press **OK**.
6. Use the **ARROW** buttons to scroll to `COPY USB FILE TO E:`.

The printer loads any executable files and processes them. The available files are listed. `SELECT ALL` is available to copy all of the available files from the USB Flash drive.

7. If necessary, use the **UP ARROW** or **DOWN ARROW** to select the file `STOREFMT.ZPL`.



zebracod.ir

8. Press the **RIGHT SELECT** button to select STORE.

   The printer stores the file in E: memory. File names of the stored files are converted to uppercase.

9. Press the **RIGHT SELECT** button to select the file STOREFMTM1.ZPL.

10. Press the **RIGHT SELECT** button to select STORE.

    The printer stores the file in E: memory.

11. Remove the USB Flash drive from the USB host port.

You can now copy these files from the printer to a USB Flash drive using the user menu item **STORE E: FILE TO USB**.

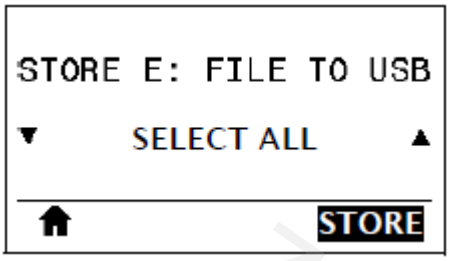


The option **SELECT ALL** is available to store all the available files from the printer to the USB Flash drive. Any .ZPL file that is copied will be post-processed so that the contents of the file will be suitable to be sent to a printer for normal execution.

## Exercise 4: Enter Data for a Stored File with a USB Keyboard and Print a Label

The Print Station feature allows you to use a USB Human Interface Device (HID), such as a keyboard or a barcode scanner, to enter ^FN field data into a *.ZPL template file.

1. After performing Exercise 3: Copy Files to/from a USB Flash Drive on page 185, plug a USB keyboard into a USB host port.

2. Use the **ARROW** buttons to scroll to the Tools menu ( ).

3. Press **OK**.

4. Use the **ARROW** buttons to scroll to **PRINT STATION**.

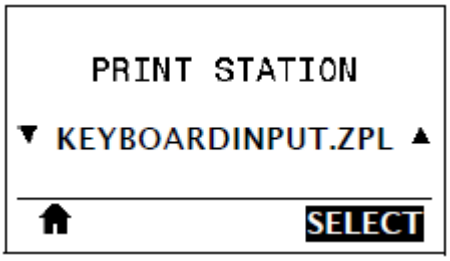


   The printer loads any executable files and processes them. The available files are listed.

5. If necessary, use the **UP ARROW** or **DOWN ARROW** to select the file KEYBOARDINPUT.ZPL.

6. Press the **RIGHT SELECT** button to choose SELECT.

   The printer accesses the file and prompts you for the information in the ^FN fields in the file. In this case, it prompts you for your name.



zebracod.ir

7. Type your name on the keyboard, and then press **<ENTER>**.

   The printer prompts for the number of labels to print.

8. Specify the desired quantity of labels, then press **<ENTER>** again.

   The specified number of labels is printed, with your name in the appropriate fields.

## Print Touch / Near-Field Communication (NFC)

The Zebra Print Touch feature allows you to touch an Android™-based, NFC-enabled device (such as a smart phone or tablet) to the printer's NFC logo to pair the device to the printer. This capability allows you to use your device to provide information for which you are prompted and then print a label using that information.

**IMPORTANT:** Some devices may not support NFC communication with the printer until you alter their settings. If you encounter difficulties, consult your service provider or your smart device manufacturer for more information.

**Figure 17** NFC Logo Location

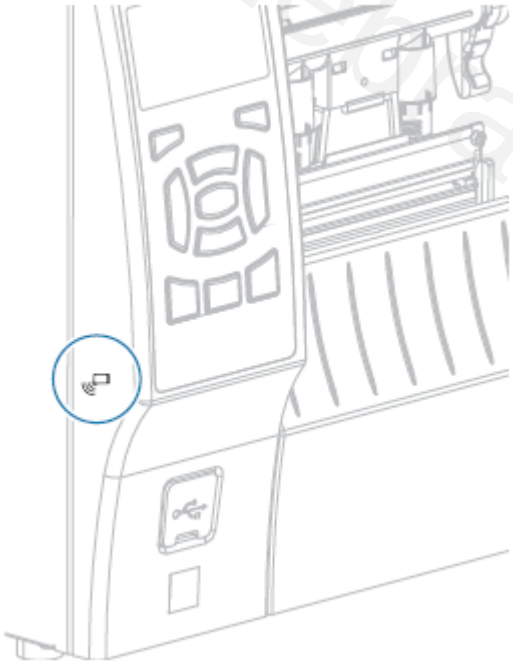

### Exercise 5: Enter Data for a Stored File with a Device and Print a Label

The steps in this exercise may vary somewhat based on:

- your device (phone or tablet)
- your service provider
- whether you already have the free Zebra Utilities app installed on your device



zebracod.ir

Refer to the Zebra Bluetooth User Guide for specific instructions for configuring your printer to use a Bluetooth interface. A copy of this manual is available at zebra.com/manuals.

1. Copy the `SMARTDEVINPUT.ZPL` file to your device.
2. If you do not have the Zebra Utilities app installed on your device, go to the app store for your device, search for the Zebra Setup Utilities app, and install it.
3. If your phone supports NFC, pair your device with the printer by holding the device next to the NFC icon on the printer. Otherwise, pair using the Bluetooth settings on your device.

   **a)** If necessary, access the Bluetooth information about your printer using your device. For instructions, refer to the manufacturer's documentation for your device.

   **b)** If necessary, select the Zebra printer's serial number to pair it with the device.

   **c)** After your device has been detected by the printer, the printer may prompt you to accept or reject the pairing. If necessary, tap **ACCEPT**. Some devices will pair with the printer without this prompt.

   

   The printer and your device are paired.
4. Start the Zebra Utilities app on your device.

   The Zebra Utilities main menu displays.
5. Tap **Available Files**.

   The smart device gets data from the printer and displays it.

**NOTE:** This retrieval process may take a minute or more to complete.

6. Scroll through the formats shown and select `SMARTDEVINPUT.ZPL`.

   Based on the `^FN` field in the label format, the device prompts you for your name.
7. Enter your name at the prompt.
8. Change the quantity of labels to print, if desired.
9. Tap **Send to Printer** to print the label.



zebracod.ir

# Specifications

This section lists general printer specifications, printing specifications, ribbon specifications, and media specifications.

## General Specifications

| | | ZT410 | ZT420 |
|---|---|---|---|
| Height (base printer model) | | 12.8 in.(325 mm) | 12.8 in. (325 mm) |
| Width | | 10.7 in. (272 mm) | 13.2 in. (335 mm) |
| Depth | | 19.7 in. (500 mm) | 19.7 in. (500 mm) |
| Weight | | 36 lb (16 kg) | 40 lb (18 kg) |
| Electrical | | 110–240 VAC, 50-60 Hz | 110–240 VAC, 50-60 Hz |
| Power consumption (reference only) | Printing PAUSE test at slowest speed | 118.7 W | 220.0 W |
| | Energy Star sleep power | <7 W | <7 W |
| Fuses | | 5A | 5A |
| Temperature | Operating | Thermal Transfer: 41°F to 104°F (5° to 40°C)<br>Direct Thermal: 32°F to 104°F (0° to 40°C) | |
| | Storage | –40°F to 140°F (–40° to 60°C) | |
| Relative Humidity | Operating | 20% to 85%, non-condensing | |
| | Storage | 5% to 85%, non-condensing | |

## Power Cord Specifications

Depending on how your printer was ordered, a power cord may or may not be included. If one is not included, or if the one that is included is not suitable for your requirements, consider the following information.

**CAUTION—PRODUCT DAMAGE:** For personnel and equipment safety, always use an approved three-conductor power cord specific to the region or country intended for installation. This cord



zebracod.ir

must use an IEC 320 female connector and the appropriate region-specific, three-conductor grounded plug configuration.

**Figure 18** Power Cord Specifications

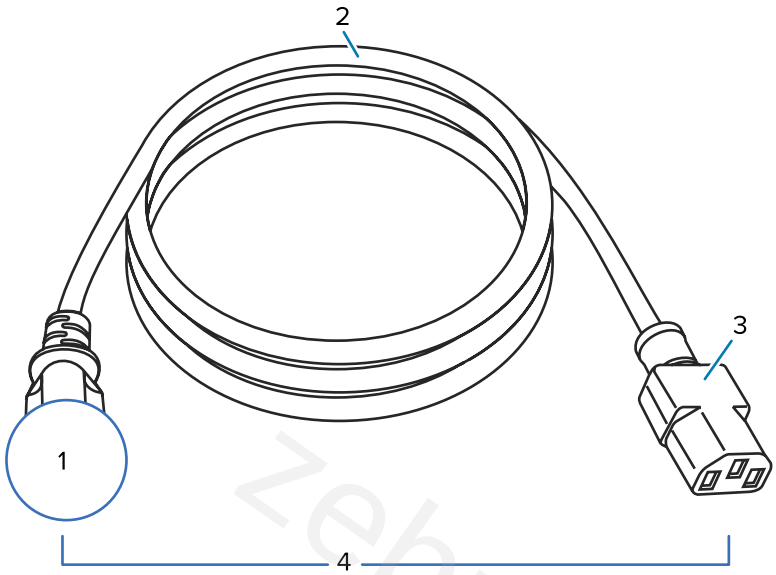


| | |
|---|---|
| 1 | AC power plug for your country—This should bear the certification mark of at least one of the known international safety organizations (see Figure 19 International Safety Organization Certification Symbols on page 190). The chassis ground (earth) must be connected to ensure safety and reduce electromagnetic interference. |
| 2 | 3-conductor HAR cable or other cable approved for your country. |
| 3 | IEC 320 connector—This should bear the certification mark of at least one of the known international safety organizations (see Figure 19 International Safety Organization Certification Symbols on page 190). |
| 4 | Length ≤ 3 m (9.8 ft). Rating 10 Amp, 250 VAC. |

**Figure 19** International Safety Organization Certification Symbols

zebracod.ir

# Communication Interface Specifications

See Communication Interfaces on page 8 for a list of physical interfaces that your printer supports.

**NOTE:** You must supply all data cables for your application. The use of cable strain relief clamps is recommended.

Ethernet cables do not require shielding, but all other data cables must be fully shielded and fitted with metal or metalized connector shells. Unshielded data cables may increase radiated emissions above the regulated limits.

To minimize electrical noise pickup in the cable:

- Keep data cables as short as possible.
- Do not bundle the data cables tightly with the power cords.
- Do not tie the data cables to power wire conduits.

## Standard Connections

The ZT410/ZT420 printers support a variety of standard connections.

### Bluetooth

- Bluetooth Classic + Low Energy (LE)standard with all printers that do not have the ac wireless print server option)
  - 2.4GHz
  - FHSS (BDR/EDR), DSSS (Bluetooth LE)
  - RF power 9.22 dBm (EIRP)
  - FHSS (BDR/EDR), DSSS (Bluetooth LE)
  - RF power 9.22 dBm (EIRP)
- Bluetooth 4.1 + Low Energy (LE) (part of the 802.11 a/b/g/n/ac wireless print server option)
  - 2.4GHz
  - FHSS (BDR/EDR), GFSK (Bluetooth Low Energy)
  - RF power 9.22 dBm (EIRP)

| | |
|---|---|
| Limitations and requirements | Many mobile devices can communicate with the printer within a 3 m ( 10 ft.) radius of the printer. |
| Connections and configuration | Refer to the Zebra Bluetooth User Guide for specific instructions for configuring your printer to use a Bluetooth interface. This manual is available at zebra.com/manuals. |

### USB Host Port (single or dual)

| | |
|---|---|
| Limitations and requirements | You can only plug one device into each USB host port. You cannot use an additional device by plugging it into a USB port on another device, nor can you use an adaptor to split a USB host port on the printer to accept more than one device at a time. |



zebracod.ir

| | |
|---|---|
| Connections and configuration | No additional configuration is necessary. |

## USB 1.1 Data Interface

| | |
|---|---|
| Limitations and requirements | Maximum cable length of 16.4 ft. (5 m). |
| Connections and configuration | No additional configuration is necessary. |

## Zebra PrintTouch/Near Field Communication (NFC)

| | |
|---|---|
| Limitations and requirements | NFC communication must be initiated by touching your device to the appropriate location on the printer. |
| Connections and configuration | Some devices may not support NFC communication with the printer until you alter their settings. |

## Wired 10/100 Ethernet Print Server (Internal)

This standard ZebraNet Ethernet option stores network configuration information in the printer. An optional Ethernet connection stores configuration information on a removable print server board, which can be shared between printers.

| | |
|---|---|
| Limitations and requirements | • The printer must be configured to use your LAN.<br>• A second wired print server can be installed in the bottom option slot. |
| Connections and configuration | Refer to the ZebraNet Wired and Wireless Print Servers User Guide for configuration instructions. This manual is available at zebra.com/manuals. |

## RS-232/C Serial Data Interface

| | |
|---|---|
| Specifications | • 2400 to 115000 baud<br>• parity, bits/character<br>• 7 or 8 data bit<br>• XON-XOFF, RTS/CTS, or DTR/DSR handshake protocol required<br>• 750mA at 5 V from pins 1 and 9 |
| Limitations and requirements | • You must use a null-modem cable to connect to the printer or a null-modem adapter if using a standard modem cable.<br>• Maximum cable length of 15.24 m (50 ft).<br>• You may need to change printer parameters to match the host computer. |
| Connections and configuration | The baud rate, number of data and stop bits, the parity, and the XON/XOFF or DTR control must match those of the host computer. |



zebracod.ir

# Optional Connections

The ZT410/ZT420 printers support these connectivity options.

## Wireless Print Server

An 802.11 a/b/g/n and an 802.11 a/b/g/n/ac version are available. The 802.11 a/b/g/n/ac version includes Bluetooth 4.1.

| | |
|---|---|
| Specifications | See Wireless Specifications on page 193 for details. |
| Limitations and requirements | • Can print to the printer from any computer on your Wireless Local Area Network (WLAN).<br>• Can communicate with the printer through the printer's web pages.<br>• The printer must be configured to use your WLAN.<br>• Can be installed only in the top option slot. |
| Connections and configuration | Refer to the ZebraNet Wired and Wireless Print Servers User Guide for configuration instructions. A copy of this manual is available at zebra.com/manuals. |

## IEEE 1284 Bidirectional Parallel data interface

| | |
|---|---|
| Limitations and requirements | • Maximum cable length of 10 ft, (3 m).<br>• Recommended cable length of 6 ft. (1.83 m).<br>• No printer parameter changes required to match the host computer.<br>• Can be installed in either the top or bottom option slot.<br>• An IEEE 1284 cable is required. |
| Connections and configuration | No additional configuration is necessary. |

## Applicator Interface

| | |
|---|---|
| Requirements | Must have a DB15F connector. |

# Wireless Specifications

## Antenna Information

| | |
|---|---|
| Type | • Patch; Gain = 3.66dBi @ 2.4GHz; Gain = 3.19dBi @ 5GHz; Impedance = 50 ohms<br>• Omni directional antenna gain 3dBi @ 2.4GHz; 5dBi @ 5GHz<br>• PCBA antenna gain = –30dBi @ 900MHz |



zebracod.ir

### WLAN Specifications

| | |
|---|---|
| 802.11 b | • 2.4 GHz<br>• DSSS (DBPSK, DQPSK, and CCK)<br>• RF power 17.77 dBm (EIRP) |
| 802.11 g | • 2.4 GHz<br>• OFDM (16-QAM and 64-QAM with BPSK, and QPSK)<br>• RF power 18.61 dBm (EIRP) |
| 802.11 n | • 2.4 GHz<br>• OFDM (16-QAM and 64-QAM with BPSK, and QPSK)<br>• RF power 18.62 dBm (EIRP) |
| 802.11 a/n | • 5.15-5.25 GHz, 5.25-5.35 GHz, 5.47-5.725 GHz<br>• OFDM (16-QAM and 64-QAM with BPSK and QPSK)<br>• RF power 17.89 dBm (EIRP) |
| 802.11 ac | • 5.15-5.25 GHz, 5.25-5.35 GHz, 5.47-5.725 GHz<br>• OFDM (16-QAM and 64-QAM with BPSK and QPSK)<br>• RF power 13.39 dBm (EIRP) |

## Printing Specifications

| Model | | ZT410 | ZT420 |
|---|---|---|---|
| Print resolution | | 203 dpi (dots/in.)/8 dots/mm | 203 dpi (dots/in.)/8 dots/mm |
| | | 300 dpi/12 dots/mm | 300 dpi/12 dots/mm |
| | | 600 dpi/24 dots/mm | N/A |
| Maximum print width | 203 dpi | 4.09 in. (104 mm) | 6.6 in. (168 mm) |
| | 300 dpi | 4.09 in. (104 mm) | 6.6 in. (168 mm) |
| | 600 dpi | 4.09 in. (104 mm) | N/A |
| Programmable constant print speeds | 203 dpi | 2.4 in. to 14 in. (61 mm to 356 mm) per second in 1-in. (25.4 mm) increments | 2.4 in. to 12 in. (61 mm to 305 mm) per second in 1-in. (25.4 mm) increments |
| | 300 dpi | 2.4 in. to 10 in. (61 mm to 254 mm) per second in 1-in. (25.4 mm) increments | 2.4 in. to 10 in. (61 mm to 203 mm) per second in 1-in. (25.4 mm) increments |
| | 600 dpi | 1.5 in. to 4 in. (38 mm to 102 mm) per second in 1-in. (25.4 mm) increments | N/A |
| Dot size (nominal) (width x length) | 203 dpi | 0.0049 in. x 0.0049 in. (0.125 mm x 0.125 mm) | 0.0049 in. x 0.0049 in. (0.125 mm x 0.125 mm) |



zebracod.ir

| Model | | ZT410 | ZT420 |
|---|---|---|---|
| | 300 dpi | 0.0033 in. x 0.0039 in. (0.084 mm x 0.099 mm) | 0.0033 in. x 0.0039 in. (0.084 mm x 0.099 mm) |
| | 600 dpi | 0.0016 in. x 0.0016 in. (0.042 mm x 0.042 mm) | N/A |
| First dot location (measured from the inside edge of the media) | 203 dpi | 0.14 in. ±0.05 in. (3.5 mm ±1.25 mm) | 0.10 in. ±0.035 in. (2.5 mm ±0.9mm) |
| | 300 dpi | 0.08 in. ±0.05 in. (2.1 mm ±1.25 mm) | 0.10 in. ±0.035 in. (2.5 mm ±0.9mm) |
| | 600 dpi | 0.08 in. ±0.05 in. (2.1 mm ±1.25 mm) | N/A |
| Bar code modulus (X) dimension | | | |
| Picket fence (nonrotated) orientation | 203 dpi | 4.9 mil to 49 mil | 5 mil to 50 mil |
| | 300 dpi | 3.3 mil to 33 mil | 3.3 mil to 33 mil |
| | 600 dpi | 1.6 mil to 16 mil | N/A |
| Ladder (rotated) orientation | 203 dpi | 4.9 mil to 49 mil | 5 mil to 50 mil |
| | 300 dpi | 3.9 mil to 39 mil | 3.9 mil to 39 mil |
| | 600 dpi | 1.6 mil to 16 mil | N/A |
| Vertical registration | all print speeds and dpi | ±1.0 mm | ±1.0 mm |

## Media Specifications

| Model | | | ZT410 | ZT420 |
|---|---|---|---|---|
| Label length | Minimum | Non-RFID | | |
| | | Tear-off | 0.5 in. (12.7 mm) | 0.5 in. (12.7 mm) |
| | | Peel-off | 0.5 in (12.7 mm) | 0.5 in (12.7 mm) |
| | | Rewind | 0.5 in. (12.7 mm) | 0.5 in. (12.7 mm) |
| | | Cutter | 1.0 in. (25.4 mm) | 1.0 in. (25.4 mm) |
| | | RFID | Varies for each transponder type | |
| | Maximum | 203 dpi or 300 dpi | 39 in. (991 mm) | 39 in. (991 mm) |
| | | 600 dpi | 20 in. (508 mm) | N/A |
| Maximum continuous media print length | | 203 dpi | 157 in. (3988 mm) | 102 in. (2590 mm) |
| | | 300 dpi | 73 in. (1854 mm) | 45 in. (1143 mm) |
| | | 600 dpi | 39 in. (991 mm) | N/A |
| Label width | Minimum | Non-RFID | 1.0 in. (25.4 mm) | 2 in. (51 mm) |
| | | RFID | Varies for each transponder type | |
| | Maximum | Tear/Cutter | 4.5 in. (114 mm) | 7.0 in. (178 mm) |



zebracod.ir

| Model | | ZT410 | ZT420 |
|---|---|---|---|
| | Peel/Rewind | 4.25 in. (108 mm) | 6.75 in. (171 mm) |
| Total thickness (includes liner, if any) | Minimum | 0.0023 in. (0.058 mm) | 0.0023 in. (0.058 mm) |
| | Maximum | 0.010 in. (0.25 mm) | |
| Maximum roll outside diameter | | 8 in. (203 mm) on a 3-in. (76-mm) inside diameter core | |
| Inter-label gap | Minimum | 0.079 in. (2 mm) | |
| | Preferred | 0.118 in. (3 mm) | |
| | Maximum | 0.157 in. (4 mm) | |
| Ticket/tag notch size (width x length) | | 0.25 in. x 0.12 in. (6 mm x 3 mm) | |
| Hole diameter | | 0.125 in. (3.18 mm) | |
| Notch or hole position (centered from inner media edge) | Minimum | 0.15 in. (3.8 mm) | |
| | Maximum | 2.25 in. (57 mm) | 3.5 in. (90 mm) |
| Density, in Optical Density Units (ODU) (black mark) | | > 1.0 ODU | |
| Maximum media density | | ≤ 0.5 ODU | |
| Transmissive media sensor (fixed position) | | 7/16 in. (11 mm) from inside edge | |

## Ribbon Specifications

Standard printers use ribbon that is coated on the outside. An optional ribbon spindle is available to use ribbon that is coated on the inside. Contact your authorized Zebra reseller for ordering information.

| | ZT410 | ZT421 |
|---|---|---|
| Ribbon width MINIMUM* | 2 in.** (51 mm**) | 2 in.** (51 mm**) |
| Ribbon width MAXIMUM | 4.33 in. (110 mm) | 6.85 in. (174 mm) |
| Ribbon length MAXIUMUM | 1476 ft (450 m) | |
| Ribbon core inside diameter | 1 in. (25 mm) | |
| Ribbon roll outside diameter MAXIMUM | 3.2 in. (81.3 mm) | |

**NOTE:**

* Zebra recommends using ribbon that is at least as wide as the media to protect the printhead from wear.

** Depending on your application, you may be able to use ribbon narrower than 2 in. (51 mm), as long as the ribbon is wider than the media being used. To use a narrower ribbon, test the ribbon's performance with your media to assure that you get the desired results

## Compliance Information

### FCC Compliance Statement

This device complies with Part 15 of the FCC Rules. Operation is subject to the following two conditions:

1. This device may not cause harmful interference



zebracod.ir

2. This device must accept any interference received, including interference that may cause undesired operation.

**NOTE:** This equipment has been tested and found to comply with the limits for a Class B digital device, pursuant to part 15 of the FCC Rules. These limits are designed to provide reasonable protection against harmful interference in a residential installation. This equipment generates, uses, and can radiate radio frequency energy and, if not installed and used in accordance with the instructions, may cause harmful interference to radio communications. However, there is no guarantee that interference will not occur in a particular installation. If this equipment does cause harmful interference to radio or television reception, which can be determined by turning the equipment off and on, the user is encouraged to try to correct the interference by one or more of the following measures:

- Reorient or relocate the receiving antenna.
- Increase the separation between the equipment and receiver.
- Connect the equipment into an outlet on a circuit different from that to which the receiver is connected.
- Consult the dealer or an experienced radio/TV technician for help.

**FCC Radiation Exposure Statement (for printers with RFID encoders)**

This equipment complies with FCC radiation exposure limits set forth for an uncontrolled environment. This equipment should be installed and operated with minimum distance 20cm between the radiator and your body.

This transmitter must not be co-located or operating in conjunction with any other antenna or transmitter.

**Canadian DOC Compliance Statement**

This Class B digital apparatus complies with Canadian ICES-003.

Cet appareil numérique de la classe B est conforme à la norme NMB-003 du Canada.

zebracod.ir



zebracod.ir

# Glossary

## alphanumeric

Indicating letters, numerals, and characters such as punctuation marks.

## backfeed

When the printer pulls the media and ribbon (if used) backward into the printer so that the beginning of the label to be printed is properly positioned behind the printhead. Backfeed occurs when operating the printer in Tear-Off and Applicator modes.

## barcode

A code by which alphanumeric characters can be represented by a series of adjacent stripes of different widths. Many different code schemes exist, such as the universal product code (UPC) or Code 39.

## black mark media

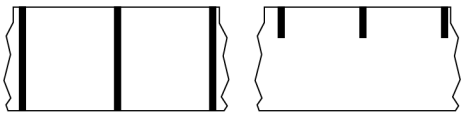

Media with registration marks found on the underside of the print media that act as start-of-label indications for the printer. The reflective media sensor is the generally-selected option for use with black mark media.

Contrast this with continuous media on page 199 or gap/notch media on page 201.

## calibration (of a printer)

A process in which the printer determines some basic information needed to print accurately with a particular media and ribbon combination. To do this, the printer feeds some media and ribbon (if used) and senses whether to use the direct thermal or thermal transfer print method, along with (if using non-continuous media) the length of individual labels or tags.



zebracod.ir

## collection method

Select a media collection method that is compatible with your printer options. Selections include tear-off, peel-off, cutter, and rewind. The basic media and ribbon loading instructions are the same for all collection methods with some additional steps necessary for using any media collection options.

## configuration

The printer configuration is a group of operating parameters specific to the printer application. Some parameters are user selectable, while others are dependent on the installed options and mode of operation. Parameters may be switch selectable, control panel programmable, or downloaded as ZPL II commands. A configuration label listing all the current printer parameters may be printed for reference.

## continuous media

Label or tag-stock media that does not have gaps, holes, notches, or black marks to indicate label separations. The media is one long piece of material wound into a roll. This allows the image to be printed anywhere on the label. Sometimes a cutter is used to cut apart individual labels or receipts.

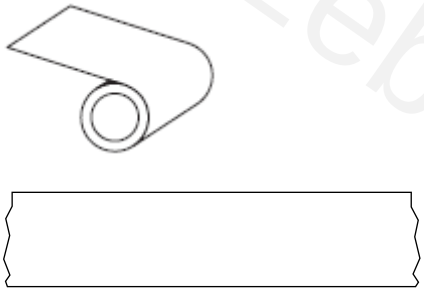

A transmissive (gap) sensor is typically used for the printer to detect when the media runs out.

Contrast this with black mark media on page 198 or gap/notch media on page 201.

## core diameter

The inside diameter of the cardboard core at the center of a roll of media or ribbon.

## diagnostics

Information about which printer functions are not working that is used for troubleshooting printer problems.

## die-cut media

A type of label stock that has individual labels stuck to a media liner. The labels may be lined up against each other or separated by a small distance. Typically the material surrounding the labels has been removed. (See non-continuous media on page 203.)



zebracod.ir

## direct thermal

A printing method in which the printhead presses directly against the media. Heating the printhead elements causes a discoloration of the heat-sensitive coating on the media. By selectively heating the printhead elements as the media moves past, an image is printed onto the media. No ribbon is used with this printing method.

Contrast this with thermal transfer on page 206.

## direct thermal media

Media that is coated with a substance that reacts to the application of direct heat from the printhead to produce an image.

## fanfold media

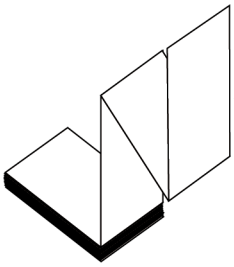

Non-continuous media that comes folded in a rectangular stack and folded in a zigzag pattern. Fanfold media is either gap-notch media or black mark media, meaning it uses black marks or notches to track media format positioning.

Fanfold media can have the same label separations as non-continuous roll media. The separations fall either on or near the folds.

Contrast this with roll media on page 205.

## firmware

This is the term used to specify the printer's operating program. This program is downloaded to the printer from a host computer and stored in flash memory. Each time the printer power is turned on, this operating program starts. This program controls when to feed the media  forward or backward and when to print a dot on the label stock.

## FLASH memory

Non-volatile memory that maintains the stored information intact when power is off. This memory area is used to store the printer's operating program. Can also be used to store optional printer fonts, graphic formats, and complete label formats.

## font

A complete set of alphanumeric characters in one style of type. Examples include CG Times™, CG Triumvirate Bold Condensed™.



zebracod.ir

## gap/notch media

Media that contains a separation, notch, or hole, indicating where one label/printed format ends and the next begins.

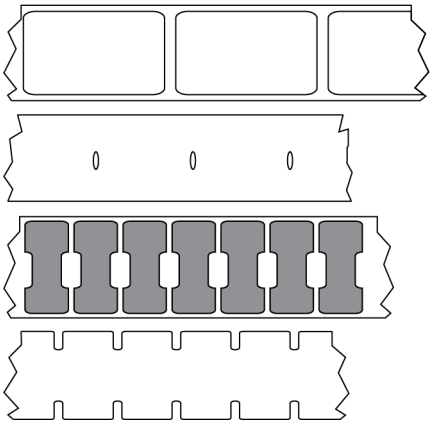

Contrast this with black mark media on page 198 or continuous media on page 199.

## ips (inches-per-second)

The speed at which the label or tag is printed. Many Zebra printers can print from 1 ips to 14 ips.

## label

An adhesive-backed piece of paper, plastic, or other material on which information is printed. A non-continuous label has a defined length, as opposed to a continuous label or a receipt which can have a varying length.

## label backing (liner)

The material on which labels are affixed during manufacture and which is discarded or recycled.

## label type

The printer recognizes the following label types.

Continuous

Gap/Notch



zebracod.ir

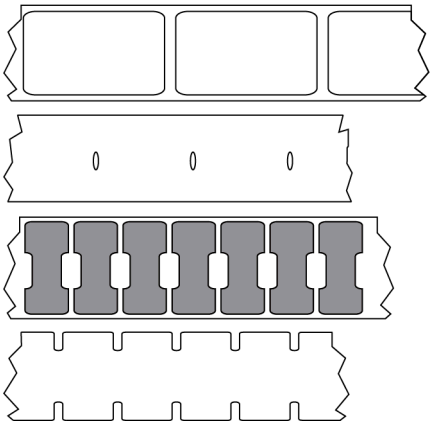

Mark

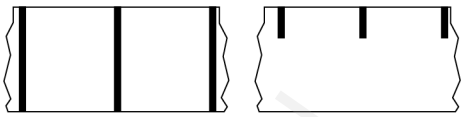

## LED (light emitting diode)

Indicators of specific printer status conditions. Each LED is either off, on, or blinking depending on the feature being monitored.

## linerless media

Linerless media does not use backing to keep the layers of labels on a roll from sticking to one another. It is wound like a roll of tape, with the sticky side of one layer in contact with the non-sticky surface of the one below it. Individual labels may be separated by perforations, or they can be cut apart. Because there is no liner, more labels can potentially fit on a roll, cutting down the need to change media as often. Linerless media is considered an environmentally-friendly option because no backing is wasted, and the cost per label can be considerably less than that of standard labels.

## LCD (liquid crystal display)

A backlit display that provides the user with either operating status during normal operation or option menus when configuring the printer to a specific application.

## mark media

See black mark media on page 198.

## media

Material onto which data is printed by the printer. Types of media include: tag stock, die-cut labels, continuous labels (with and without media liner), non-continuous media, fanfold media, and roll media.



zebracod.ir

## media sensor

This sensor is located behind the printhead to detect the presence of media and, for non-continuous media, the position of the web, hole, or notch used to indicate the start of each label.

## media supply hangar

The stationary arm that supports the media roll.

## non-continuous media

Media that contains an indication of where one label/printed format ends and the next one begins. Types of non-continuous media include gap-notch media and black mark media. (Contrast this with continuous media.)

Non-continuous roll media usually comes in the form of labels with an adhesive backing on a liner. Tags (or tickets) are separated by perforations.

Individual labels or tags are tracked and position-controlled using one of these methods:

- Web media separates labels by gaps, holes, or notches.

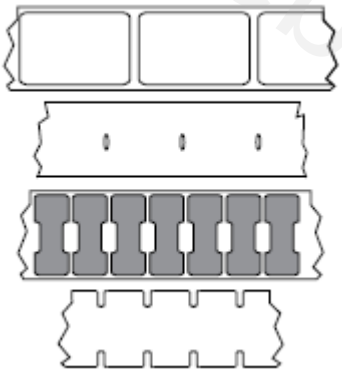

- Black mark media uses pre-printed black marks on the back side of the media to indicate label separations.

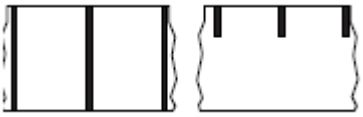

- Perforated media has holes—to allow the labels or tags to be separated from each other easily—along with position-control marks, notches, or label gaps.

zebracod.ir

## non-volatile memory

Electronic memory that retains data even when the power to the printer is turned off.

## notched media

A type of tag stock containing a cutout area that can be sensed as a start-of-label indicator by the printer. This is typically a heavier, cardboard-like material that is either cut or torn away from the next tag. See gap/notch media on page 201.

## peel-off mode

A mode of operation in which the printer peels a printed label away from the backing and allows the user to remove it before another label is printed. Printing pauses until the label is removed.

## perforated media

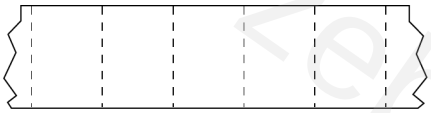

Media with perforations that allow the labels or tags to be separated from each other easily. The media may also have black marks or other separations between labels or tags.

## print speed

The speed at which printing occurs. For thermal transfer printers, this speed is expressed in terms of inches per second (ips).

## print type

The print type specifies whether the type of media being used requires ribbon to print. Thermal transfer media requires ribbon while direct thermal media does not.

## printhead wear

The degradation of the surface of the printhead and/or the print elements over time. Heat and abrasion can cause printhead wear. Therefore, to maximize the life of the printhead, use the lowest print darkness setting (sometimes called burn temperature or head temperature) and the lowest printhead pressure necessary to produce good print quality. In the thermal transfer printing method, use ribbon that is as wide or wider than the media to protect the printhead from the rough media surface.



zebracod.ir

## Radio frequency identification (RFID) "smart" media

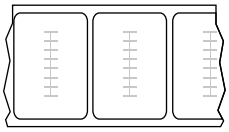

Each RFID label has an RFID transponder (sometimes called an "inlay"), made of a chip and an antenna, embedded between the label and the liner. The shape of the transponder varies by manufacturer and is visible through the label. All "smart" labels have memory that can be read, and many have memory that can be encoded.

RFID media can be used in a printer that is equipped with an RFID reader/encoder. RFID labels are made from the same materials and adhesives as non-RFID labels.

## receipt

A receipt is a variable length printout. One example of a receipt is in retail stores, where each purchased item occupies a separate line on the printout. Therefore, the more items purchased, the longer the receipt.

## registration

Alignment of printing with respect to the top (vertical) or sides (horizontal) of a label or tag.

## ribbon

Ribbon is a thin film that is coated on one side with wax, resin, or wax resin (usually called ink), which is transferred to the media during the thermal transfer process. Ink is transferred onto the media when heated by the small elements within the printhead.

Ribbon is only used with the thermal transfer print method. Direct thermal media does not use ribbon. When ribbon is used, it must be as wide as or wider than the media being used. If the ribbon is narrower than the media, areas of the printhead are unprotected and subject to premature wear. Zebra ribbons have a coating on the back that protects the printhead from wear.

## ribbon wrinkle

A wrinkling of the ribbon caused by improper alignment or improper printhead pressure. This wrinkle can cause voids in the print and/or the used ribbon to rewind unevenly. This condition should be corrected by performing adjustment procedures.

## roll media

Media that comes supplied rolled onto a core (usually cardboard). It can be continuous (no separations between labels)



zebracod.ir

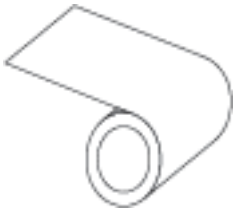

or non-continuous (some type of separation between labels).

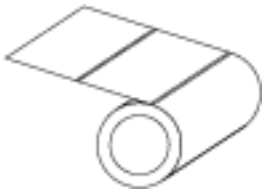

Contrast this with fanfold media on page 200.

## supplies

A general term for media and ribbon.

## symbology

The term generally used when referring to a barcode.

## tag stock

A type of media having no adhesive backing but featuring a hole or notch by which the tag can be hung on something. Tags are usually made of cardboard or other durable material and are typically perforated between tags. Tag stock can come on rolls or in a fanfold stack. (See gap/notch media on page 201.)

## tear-off mode

A mode of operation in which the user tears the label or tag stock away from the remaining media by hand.

## thermal transfer

A printing method in which the printhead presses an ink or resin coated ribbon against the media. Heating the printhead elements causes the ink or resin to transfer onto the media. By selectively heating the printhead elements as the media and ribbon move past, an image is printed onto the media.

Contrast this with direct thermal on page 200.

## void

A space on which printing should have occurred, but did not due to an error condition such as wrinkled ribbon or faulty print elements. A void can cause a printed barcode symbol to be read incorrectly or not at all.



zebracod.ir

zebracod.ir



zebracod.ir